GEORGIA POWER COMPANY

PLANT WANSLEY
COAL COMBUSTION RESIDUALS (CCR) LANDFILL
PERMIT DRAWINGS
HEARD COUNTY, GEORGIA
SEPTEMBER 2022

DRAWING INDEX:

H1C11120 REV. 0 TITLE SHEET AND DRAWING INDEX
H1C11121 REV. 0 PERMITTED SITE BOUNDARY, PLAT AND LEGAL DESCRIPTION
H1C11122 REV. 0 SITE TOPOGRAPHIC SURVEY
H1C11123 REV. 0 SITE STREAM & WETLAND BUFFERS, 100yr FLOOD PLAIN, & BORING LOCATIONS
H1C11124 REV. 0 GENERAL SITE DEVELOPMENT, CELL LAYOUT
H1C11125 REV. 0 CELL NO. 1 SITE DEVELOPMENT, BASE GRADE PLAN
H1C11126 REV. 0 CELL NO. 2 SITE DEVELOPMENT, ROUGH GRADE/BORROW PLAN
H1C11127 REV. 0 SITE DEVELOPMENT, SECURITY ROAD PLAN
H1C11128 REV. 0 SITE DEVELOPMENT, SECURITY ROAD PROFILE
H1C11130 REV. 0 CELL NO. 1 SITE DEVELOPMENT, FINAL STACKING PLAN
H1C11131 REV. 0 CELL NO. 2 SITE DEVELOPMENT, BASE GRADING PLAN
H1C11132 REV. 0 CELL NOS. 1 & 2 COMBINED, FINAL STACKING PLAN
H1C11133 REV. 0 CELL NO. 3 SITE DEVELOPMENT, BASE GRADE PLAN
H1C11134 REV. 0 CELL NO. 3, FINAL STACKING PLAN
H1C11135 REV. 0 CELL NO. 1 SECTIONS THRU STACK
H1C11136 REV. 0 CELL NO. 2 SECTIONS THRU STACK
H1C11137 REV. 0 CELL NO. 3 SECTIONS THRU STACK
H1C11138 REV. 0 CELL 1 THROUGH CELL 3, MISCELLANEOUS SECTIONS, SHEET 1
H1C11139 REV. 0 CELL 1 THROUGH CELL 3, MISCELLANEOUS SECTIONS, SHEET 2
H1C11140 REV. 0 CELL 1 THROUGH CELL 3, MISCELLANEOUS SECTIONS, SHEET 3
H1C11141 REV. 0 CELL NO. 1 AND CELL NO. 2 SEDIMENT POND SPILLWAY, SECTIONS AND DETAILS
H1C11142 REV. 0 GENERAL GYPSUM STACKING, OPERATION PLAN
H1C11143 REV. 0 CELL 1 THROUGH CELL 3, MISCELLANEOUS DETAILS, SHEET 1
H1C11144 REV. 0 CELL 1 THROUGH CELL 3, MISCELLANEOUS DETAILS, SHEET 2
H1C11145 REV. 0 CELL 1 THROUGH CELL 3, MISCELLANEOUS DETAILS, SHEET 3
H1C11146 REV. 0 CELL 1 THROUGH CELL 3, MISCELLANEOUS SECTIONS AND DETAILS, SHEET 1
H1C11147 REV. 0 CELL 1 THROUGH CELL 3, MISCELLANEOUS SECTIONS AND DETAILS, SHEET 2
H1C11148 REV. 0 CELL 1 THROUGH CELL 3, MISCELLANEOUS SECTIONS AND DETAILS, SHEET 3
H1C11149 REV. 0 CELL 1 THROUGH CELL 3, EROSION CONTROL SECTIONS & DETAILS, SHEET 1
H1C11150 REV. 0 CELL 1 THROUGH CELL 3, EROSION CONTROL SECTIONS & DETAILS, SHEET 2
H1C11151 REV. 0 CELL 1 THROUGH CELL 3, SIPHON SECTIONS AND DETAILS
H1C11152 REV. 0 CELL 1 THROUGH CELL 3, FLUME DATA SHEET
H1C11153 REV. 0 GENERAL SITE DEVELOPMENT, CELL NO. 1, LEACHATE COLLECTION SYSTEM LAYOUT
H1C11154 REV. 0 GENERAL SITE DEVELOPMENT, CELL NO. 2, LEACHATE COLLECTION SYSTEM LAYOUT
H1C11155 REV. 0 GENERAL SITE DEVELOPMENT, CELL NO. 3, LEACHATE COLLECTION SYSTEM LAYOUT & DETAILS
H1C11160 REV. 0 GEOLOGIC CROSS–SECTIONS A–A AND B–B
H1C11161 REV. 0 POTENTIOMETRIC SURFACE MAP, 11/17/2006
H1C11163 REV. 0 POTENTIOMETRIC SURFACE MAP, 4/10/2009
H1C11165 REV. 0 COMPLIANCE NETWORK

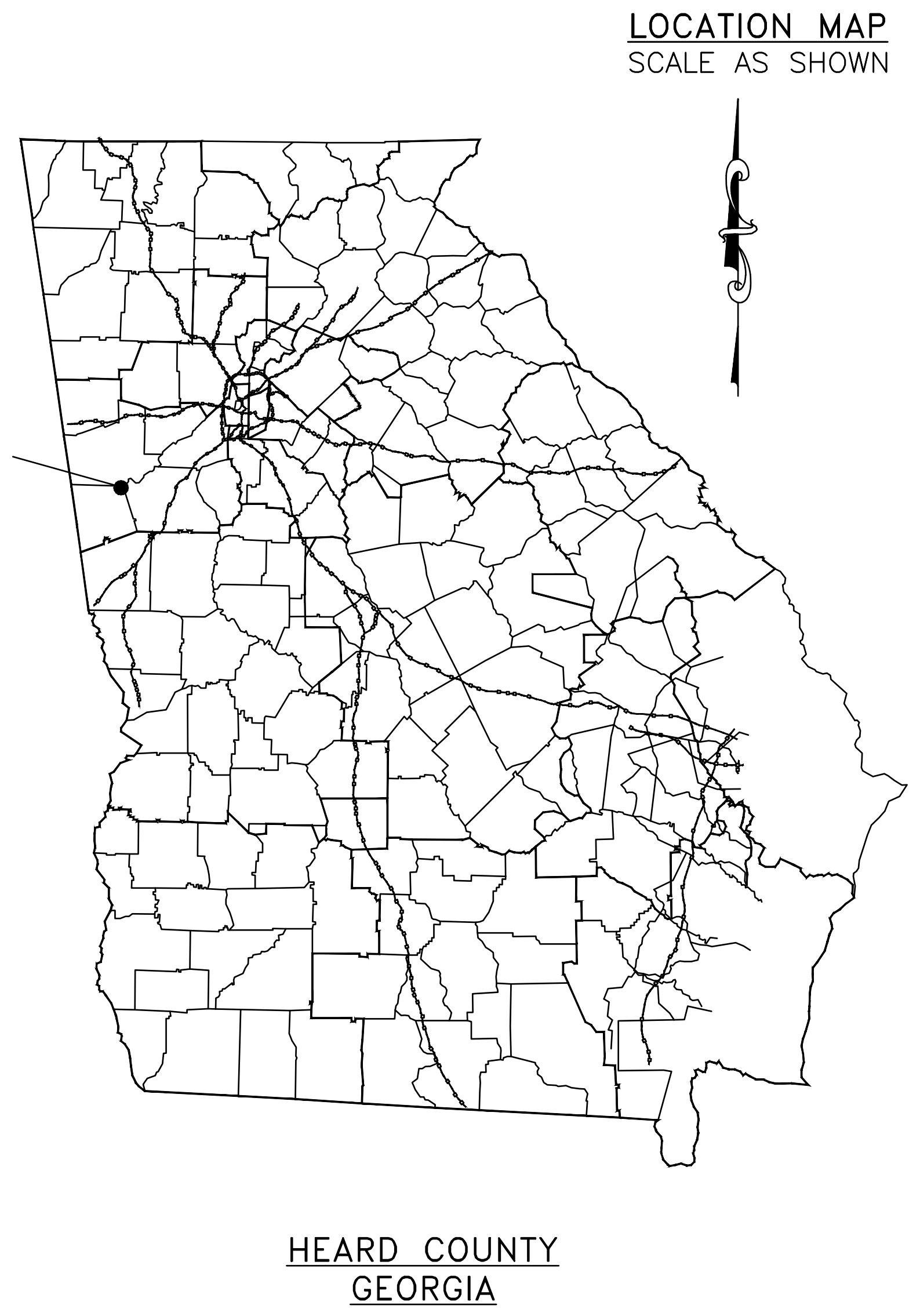

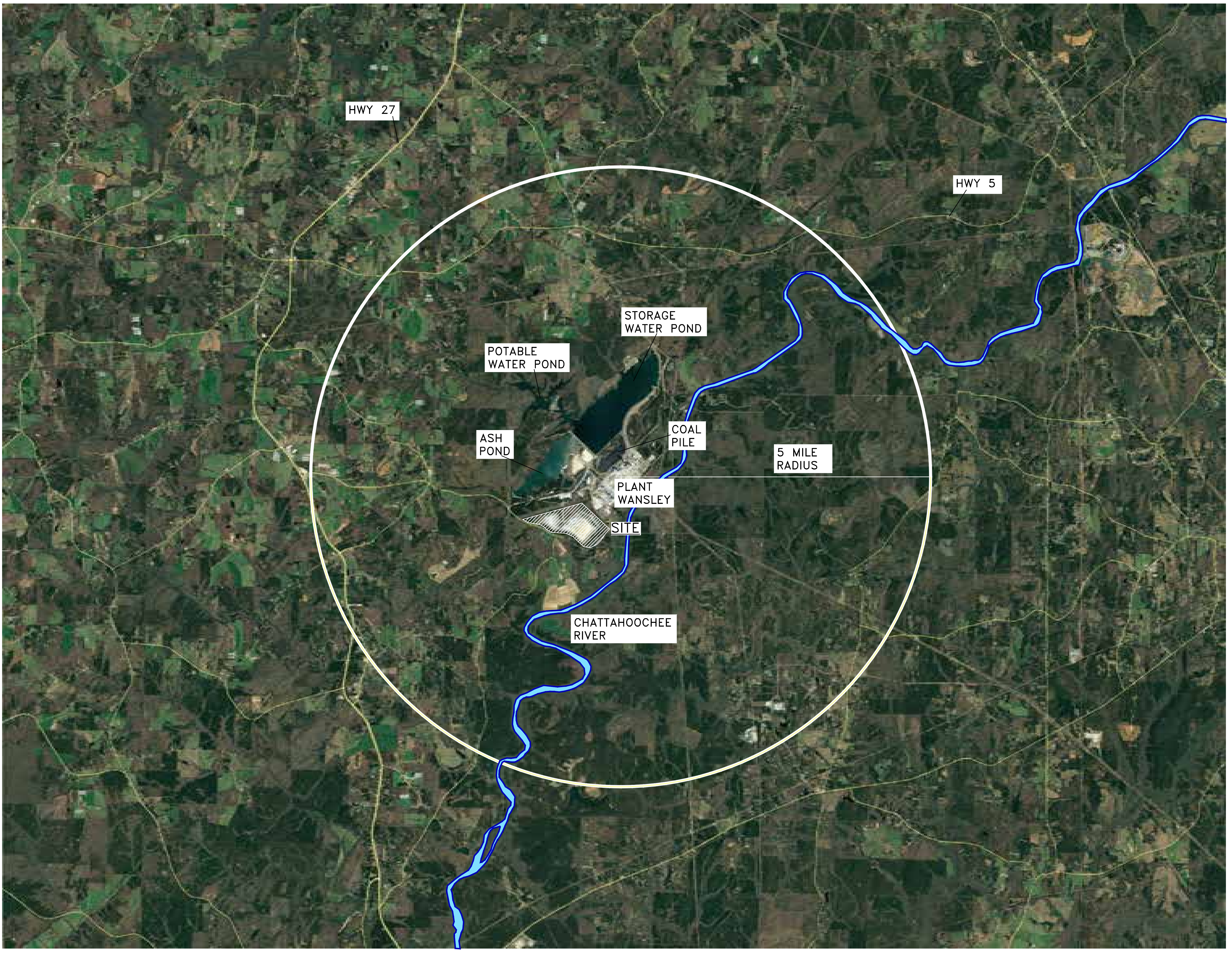

RESPONSIBLE OFFICIAL

VICE PRESIDENT
ENVIRONMENTAL AFFAIRS
GEORGIA POWER COMPANY
BIN 10221
241 RALPH MCGILL BLVD.
ATLANTA, GEORGIA 30308
(404) 506–7777

ADDRESS

PLANT WANSLEY
1371 LIBERTY CHURCH ROAD
CARROLTON, GA 30116

PROPERTY OWNER

GEORGIA POWER COMPANY
241 RALPH McGILL BLVD.
ATLANTA, GEORGIA 30308

CCR LANDFILL PERMIT APPLICATION CONSULTANT

HODGES, HARBIN, NEWBERRY & TRIBBLE, INC (HHNT, INC.)
3920 ARKWRIGHT RD, SUITE 101
MACON, GA 31210
(478) 743–7175

CONSULTANT

SOUTHERN COMPANY GENERATION
GARY McWHORTER
BIN 10160
241 RALPH McGILL BLVD.
ATLANTA, GEORGIA 30308
TEL: (404) 506–7291

NO. 27185
R. GRANT LANE
9/27/22

GARY H. McWHORTER
9/27/22

GEORGIA
DEPARTMENT OF NATURAL RESOURCES
ENVIRONMENTAL PROTECTION DIVISION
Approved
Solid Waste Management Program
Approved By: Keith Stevens Digitally signed by Keith Stevens Date: 2022.10.25 08:59:48 -04'00'

PERMIT REVISION HISTORY: THE ORIGINAL PERMIT DRAWINGS FOR THE PLANT WANSLEY CCR LANDFILL WERE PREPARED BY SOUTHERN COMPANY GENERATION ENGINEERING AND CONSTRUCTION SERVICES (SCGECS). THESE PERMIT DRAWINGS WERE REVIEWED BY GEORGIA EPD AND APPROVED ON JUNE 15, 2010 AS PART OF THE FACILITY'S SOLID WASTE HANDLING PERMIT WITH SUBSEQUENT REVISIONS TO THE DRAWINGS APPROVED BY GEORGIA EPD THROUGH PERMIT MODIFICATIONS. HODGES, HARBIN, NEWBERRY, AND TRIBBLE INC. (HHNT) HAS ASSISTED GEORGIA POWER COMPANY IN PREPARATION OF THE CCR LANDFILL PERMIT AS REQUIRED BY THE NEW SOLID WASTE RULE 391–4–.10(9)(a) FOR COAL COMBUSTION RESIDUAL UNITS. MINOR PLAN REVISIONS AND UPDATES HAVE BEEN MADE AS PART OF THE NEW CCR LANDFILL PERMITTING PROCESS AND ARE INCLUDED HEREIN. AT THE REQUEST OF GEORGIA EPD AND AS PART OF THE NEW CCR PERMIT PROCESS, ALL PREVIOUS PLAN REVISION NOTES FOR THE FACILITY'S ORIGINAL SOLID WASTE HANDLING PERMIT HAVE BEEN REMOVED.

LEGEND:

▨ COAL COMBUSTION BY–PRODUCT DISPOSAL FACILITY AREA

NOTE: COAL–COMBUSTION BY–PRODUCTS (CCB) AND COAL COMBUSTION RESIDUALS (CCR) HAVE THE SAME MEANING IN THESE PERMIT DRAWINGS.

Southern Company Generation
Engineering and Construction Services
FOR
Georgia Power Company

PLANT WANSLEY
COAL COMBUSTION RESIDUALS (CCR) LANDFILL
TITLE SHEET AND DRAWING INDEX

REVISION 0 DATE 09–23–2022
CCR LF PERMIT APPLICATION [BY HHNT, INC.]

BY	CHK'D	CIVIL APPR	ELECT APPR	I/C APPR	MECH APPR	DISC MGR	SCALE	PROJ I.D.	DRAWING NUMBER	SHEET	CONT'D	REV
ANR	RBL		☒	☒	☒	☒	AS SHOWN	010209	H1C11120	1	FINAL	0

ANSI F: 40x28 Acad2008

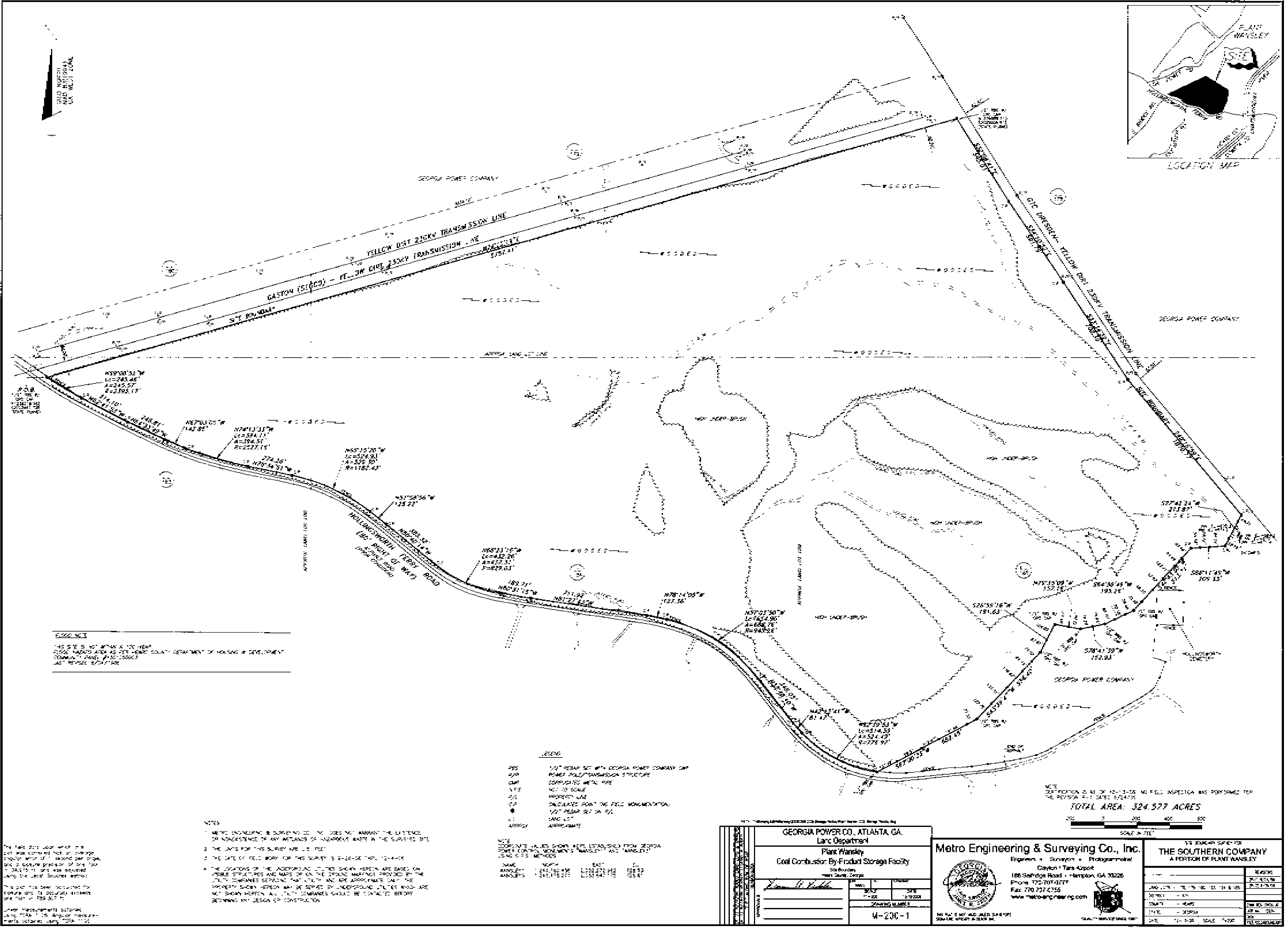
GRID NORTH
NAD 83(1994)
GA WEST ZONE
PLANT WANSLEY
SITE
LOCATION MAP
GEORGIA POWER COMPANY
YELLOW DIRT 230KV TRANSMISSION LINE
GASTON (SEGCO) - YELLOW DIRT 230KV TRANSMISSION LINE
SITE BOUNDARY
GTC DRESDEN - YELLOW DIRT 230KV TRANSMISSION LINE
SITE BOUNDARY
P.O.B.
HOLLINGSWORTH FERRY ROAD (80' RIGHT OF WAY)
N59°00'52"W
Lc=245.46
A=245.57
R=2395.17
N67°03'05"W 142.85'
N74°13'33"W
Lc=394.11
A=394.51
R=2527.16
N65°15'20"W
Lc=524.93
A=529.30
R=1188.49
N66°23'16"W
Lc=432.26
A=437.31
R=829.03
N78°14'05"W 127.36'
N57°03'50"W
Lc=654.90
A=668.76
R=945.26
N62°39'53"W
Lc=514.59
A=524.49
R=776.97
S27°42'24"W 213.87'
S86°11'49"W 209.33'
S64°36'49"W 195.26'
S78°41'39"W 152.93'
N79°35'09"W 157.16'
S26°59'16"W 191.63'
S62°00'23"W
GEORGIA POWER COMPANY
TOTAL AREA: 324.577 ACRES
SCALE IN FEET
GEORGIA POWER CO., ATLANTA, GA.
Land Department
Plant Wansley
Coal Combustion By-Product Storage Facility
Site Boundary
Heard County, Georgia
DRAWING NUMBER
M-20C-1
Metro Engineering & Surveying Co., Inc.
Engineers • Surveyors • Photogrammetrists
Clayton / Tara Airport
166 Selfridge Road • Hampton, GA 30228
Phone 770-707-0777
Fax 770 707-0755
www.metro-engineering.com
THE SOUTHERN COMPANY
A PORTION OF PLANT WANSLEY

The property is a portion of Land Lots 178, 179, 180, 183, 184 and 185, Fourth District, Heard County, Georgia and being more particularly described as follows:

Begin at the intersection of the northeasterly right of way of Hollingsworth Ferry Road (80'R/W) and the southerly right of way of the Gaston (SEGCO) –Yellow Dirt 230KV Transmission Line, said intersection is designated by a set 1/2"rebar with a GPC cap and has state plane coordinates (Georgia West – NAD 83 (1994)) of x = 2023467.80 feet and y = 1238318.97 feet; thence North 74°10'19"East along a grid bearing and coincident with said southerly right of way for a distance of 5757.41 feet to the intersection of said southerly right of way of the Gaston (SEGCO) –Yellow Dirt 230KV Transmission Line and the westerly right of way of the GTC Dresden –Yellow Dirt 230KV Transmission Line, said intersection is designated by a set 1/2" rebar with a GPC cap and has state plane coordinates (Georgia West – NAD 83 (1994)) of x = 2029006.91 feet and y = 1239889.31 feet; thence South 32°08'41"East along said westerly right of way for a distance of 595.03 feet; thence South 34°10'52"East along said westerly right of way for a distance of 591.79 feet; thence South 33°34'32"East along said westerly right of way for a distance of 708.39 feet; thence South 40°16'59"East along said westerly right of way for a distance of 1070.77 feet; thence South 27°42'24"West for a distance of 213.87 feet; thence South 86°11'49"West for a distance of 209.33 feet; thence South 42°43'05"West for a distance of 513.71 feet to a set 1/2"rebar with a GPC cap; thence South 64°36'49"West for a distance of 195.26 feet to a set 1/2"rebar with a GPC cap; thence South 78°41'39"West for a distance of 152.93 feet to a set 1/2"rebar with a GPC cap; thence North 79°35'09"West for a distance of 157.16 feet to a set 1/2"rebar with a GPC cap; thence South 26°59'16"West for a distance of 191.63 feet to a set 1/2"rebar with a GPC cap; thence South 43°39'47"West for a distance of 556.40 feet to a set 1/2"rebar with a GPC cap; thence South 62°00'23"West for a distance of 689.45 feet to a point on the northerly right of way of Hollingsworth Ferry Road (80'R/W), said point is designated by a set 1/2"rebar with a GPC cap; thence northwesterly along a non–tangential curve and coincident with said northerly right of way, said non–tangential curve being concave northeasterly, having a radius of 776.97 feet, chord length of 514.59 feet, chord bears North 62°39'53"West and an arc length of 524.49 feet; thence North 42°13'41"West along a non tangent line and being coincident with said right of way for a distance of 81.47 feet; thence North 38°48'40"West along said right of way for a distance of 348.05 feet; thence northwesterly along a non–tangential curve and coincident with said right of way, said non–tangential curve being concave southwesterly, having a radius of 945.26 feet, chord length of 654.90 feet, chord bears North 57°03'50"West and an arc length of 668.76 feet; thence North 78°14'05"West along a non tangent line and being coincident with said right of way for a distance of 127.36 feet; thence North 81°27'43"West along said right of way for a distance of 711.92 feet; thence North 80°31'15"West along said right of way for a distance of 189.71 feet; thence northwesterly along a non–tangential curve and coincident with said right of way, said non–tangential curve being concave northeasterly, having a radius of 829.03 feet, chord length of 432.26 feet, chord bears North 66°23'16"West and an arc length of 437.31 feet; thence North 50°40'14"West along a non tangent line and being coincident with said right of way for a distance of 383.32 feet; thence North 51°58'56"West along said right of way for a distance of 125.22 feet; thence northwesterly along a non–tangential curve and coincident with said right of way, said non–tangential curve being concave southwesterly, having a radius of 1188.49 feet, chord length of 524.93 feet, chord bears North 65°15'20"West and an arc length of 529.30 feet; thence North 78°34'51"West along a non tangent line and being coincident with said right of way for a distance of 274.26 feet; thence northwesterly along a non–tangential curve and coincident with said right of way, said non–tangential curve being concave northeasterly, having a radius of 2527.16 feet, chord length of 394.11 feet, chord bears North 74°13'33"West and an arc length of 394.51 feet; thence North 67°03'05"West along a non tangent line and being coincident with said right of way for a distance of 142.85 feet; thence North 64°33'49"West along said right of way for a distance of 245.81 feet; thence North 62°41'53"West along said right of way for a distance of 314.10 feet; thence northwesterly along a non–tangential curve and coincident with said right of way, said non–tangential curve being concave northeasterly, having a radius of 2395.17 feet, chord length of 245.46 feet, chord bears North 59°00'52"West and an arc length of 245.57 feet to the point of beginning and containing 324.577 acres, more or less.

GEORGIA
DEPARTMENT OF NATURAL RESOURCES
ENVIRONMENTAL PROTECTION DIVISION
Approved
Solid Waste Management Program
Approved By: Keith Stevens
Digitally signed by Keith Stevens
Date: 2022.10.25 08:59:48 -04'00'

REFERENCE DRAWINGS:

1. FOR A COMPLETE DRAWING LIST SEE SHEET H1C11120
2. COMPOSITE MAP OF PLANT WANSLEY COAL COMBUSTION BY-PRODUCT STORAGE FACILITY LAND DEPARTMENT MAP FILE NO. M-20C.
3. GEORGIA POWER COMPANY LAND DEPARTMENT PROPERTY PLAT K-8-1, DATED 6-5-72.

Southern Company Generation
Engineering and Construction Services
FOR
Georgia Power Company

REVISION 0 DATE 09-23-2022
CCR LF PERMIT APPLICATION [BY HHNT, INC.]

PLANT WANSLEY
COAL COMBUSTION BY-PRODUCT DISPOSAL FACILITY
PERMITTED SITE BOUNDARY
PLAT AND LEGAL DESCRIPTION

BY	CHK'D	CIVIL APPR	ELECT APPR	I/C APPR	MECH APPR	DISC MGR
ANR	RBL					

SCALE	PROJ I.D.	DRAWING NUMBER	SHEET	CONT'D	REV
AS SHOWN	010209	H1C11121	1	FINAL	0

ANSI F: 40x28 Acad2008

NORTH ARROW
PT.56
P.O.B.
1/2" RBS W/ GPC CAP N1238318.965 E2023467.798 (STATE PLANE)
EXISTING FENCE
PT.55
PT.65
PT.66
P/L
PT.67
PT.68
GPC P/L
N59°00'52"W Lc=245.46' A=245.57' R=2395.17'
314.10' N62°41'53"W
245.81' N64°33'49"W
N67°03'05"W 142.85'
N74°13'33"W Lc=394.11' A=394.51' R=2527.16'
274.26' N78°34'51"W
PT.200
N65°15'20"W Lc=524.93' A=529.30' R=1188.49'
N51°58'56"W 125.22'
383.32' N50°40'14"W
HOLLINGSWORTH FERRY ROAD
SITE BOUNDARY
ROAD LIMIT OF CLEARING AND GRUBBING
200' UNDISTURBED BUFFER
200' SITE BUFFER
WOODED
PERMITTED SITE BOUNDARY N66°23'16"W Lc=432.26' A=437.31' R=829.03'
N66°23'16"W Lc=432.26' A=437.31' R=829.03'
189.71' N80°31'15"W
711.92' N81°27'43"W
GPCO P/L
N78°14'05"W 127.36'
PROPOSED SECURITY ROAD LIMITS OF CLEARING AND GRUBBING
N57°03'50"W Lc=654.90' A=668.76' R=945.26'
348.05' N38°48'40"W
PT.202
N42°13'41"W 81.47'
N62°39'53"W Lc=514.59' A=524.49' R=776.97'
PT.204
GASTON (SEGCO) - YELLOW DIRT 230KV
YATES - YELLOW DIRT 230KV
N74°10'19"E 5757.41'
PT.52
PT.50
PT.51
PT.57
PT.58
PT.59
PT.67
PT.61
PT.62
PT.69
1/2" RBS W/ GPC CAP N1239889.313 E2029006.913 (STATE PLANE)
S32°08'41"E 595.03'
S34°10'52"E 591.79'
200' UNDISTURBED BUFFER
GTC YELLOW DIRT - DRESDEN T/L
S33°34'32"E 708.39'
P/L
S40°16'59"E 1070.77'
STREAM
HIGH UNDER-BRUSH
1/2" RBS ALONG THE SOUTHERLY PROPERTY LINE
S27°42'24"W 213.87'
INV. EL.=670.3
INV. EL.=671.2
INV. EL.=669.1
INV. EL.=670.7
INV. EL.=671.4
84"CMP'S
S86°11'49"W 209.33'
513.71' S42°43'05"W
PT.206
1/2" RBS W/ GPC CAP
S26°59'16"W 191.63'
S64°36'49"W 195.26'
N79°35'09"W 157.16'
S78°41'39"W 152.93'
HOLLINGSWORTH CEMETERY
EXISTING FENCE
556.40' S43°39'47"W
689.45' S62°00'23"W
GPC P/L
N 1240000
N 1239000
N 1238000
N 1237000
N 1236000
E 2025000
E 2026000
E 2027000
E 2028000
E 2029000
E 2030000
PLANT WANSLEY
SITE
GA. POWER RD.
HOLLINGSWORTH FERRY RD.
S. BRIDGE RD.
FIVE NOTCH RD.
HEARD CO.
COWETA CO.
CHATTAHOOCHEE RIVER
LOCATION MAP
GRAPHIC SCALE
200 0 100 200 400 800
(IN FEET)
1 inch = 200 ft.

SITE BOUNDARY AREA = 324.6 ACRES

NOTE
ELEVATIONS AND COORDINATE VALUES SHOWN WERE ESTABLISHED FROM GEORGIA POWER CONTROL MONUMENTS "WANSLEY1" AND "WANSLEY3" USING G.P.S. METHODS. CONTOURS WERE ESTABLISHED FROM A FIELD RUN TOPOGRAPHIC SURVEY PERFORMED BY METRO ENGINEERING & SURVEY COMPANY INC. BETWEEN THE DATES OF JUNE 8, 2006 AND SEPT. 29, 2006.

NAME	NORTH.	EAST.	EL.
WANSLEY1	1,241,760.438	2,032,272.962	728.53
WANSLEY3	1,243,176.271	2,033,647.175	725.61

Point	North	East	Elev	Name
50	1239344.75	2026847.42	770.03	N&C
51	1239409.23	2027081.48	778.48	N&C
52	1239270.08	2026590.84	779.23	N&C
55	1238404.79	2023545.79	855.20	N&C
56	1238364.32	2023312.79	840.33	N&C
57	1239487.13	2027355.49	741.23	N&C
58	1239553.09	2027587.59	771.95	N&C
59	1239596.47	2027739.12	780.58	N&C
60	1239689.18	2028065.12	757.79	N&C
61	1239754.67	2028297.74	742.53	N&C
62	1239832.77	2028574.67	736.02	N&C
65	1238497.78	2023869.73	847.48	N&C
66	1238614.34	2024276.92	811.32	N&C
67	1238132.56	2023677.25	851.99	N&C
68	1237846.25	2024263.88	821.85	N&C
69	1239897.25	2028808.63	729.01	N&C
200	1237649.70	2024980.48	807.83	N&C
202	1236268.87	2027908.23	760.36	N&C
204	1235909.46	2029075.45	735.36	N&C
206	1236952.32	2030297.62	716.25	N&C

STATE PLANE COORDINATES, GEORGIA WEST ZONE, NAD83

CERTIFICATION:

THIS TOPOGRAPHIC MAP WAS PREPARED BY METRO ENGINEERING & SURVEYING CO., INC. FROM A FIELD RUN TOPOGRAPHIC SURVEY PERFORMED BETWEEN THE DATES OF JUNE 8, 2006 AND SEPT. 29, 2006. BASED ON THE DESCRIBED MAPPING PARAMETERS AND PROCEDURES, I CERTIFY THAT THIS TOPOGRAPHIC MAP WAS GENERATED AT 1"= 200' WITH A CONTOUR ACCURACY OF 1 FT. BASED ON NATIONAL MAPPING STANDARDS.

GARY H. McWHORTER, P.E.
GA. REG. NO. 012687

NOTES:

1. TOPOGRAPHIC SURVEY COMPLETED SEPTEMBER 29, 2006.
2. HORIZONTAL AND VERTICAL CONTROL PROVIDED BY GEORGIA POWER COMPANY LAND DEPARTMENT.

REFERENCE DRAWINGS:

1. FOR A COMPLETE DRAWING LIST SEE SHEET H1C11120
2. COMPOSITE MAP OF PLANT WANSLEY COAL COMBUSTION BY-PRODUCT STORAGE FACILITY LAND DEPARTMENT MAP FILE NO. M-200.
3. GEORGIA POWER COMPANY LAND DEPARTMENT PROPERTY PLAT K-8-1, DATED 6-5-72.

LEGEND:

PLAT ABBREVIATIONS

IPF	Iron Pin Found
IPS	1/2" Rebar Set
CMF	Concrete Monument Found
FPS	Fence Post Set
OTP	Open Top Pipe
CTP	Crimp Top Pipe
Conc.	Concrete
Alumn.	Aluminum
P/L	Property Line
R/W	Right of Way
C/L	Centerline
F/L	Fenceline
T/L	Transmission Line
N/F	Now or Formerly
DB	Deed Book
PB	Plat Book
MF	Map File No.
GPC	Georgia Power Company

MONUMENTATION LEGEND

⊙	Depicts Iron Pin Set
◎	Depicts Iron Pin Found
▣	Depicts Monument Set
▣	Depicts Monument Found
△	Depicts Unmonumented Point on Top of Bank
⊕	Survey Control Monument, Construction

UTILITY LEGEND

TOWER ⊠	Powerline Tower
PP ⌀	Power Pole

LINE LEGEND

▬ ▬ ▬	Property Line
🟪	Site Boundary
🟩	Buffer Boundary
—×—×—	Fence
—840—	Existing Contours

GEORGIA
DEPARTMENT OF NATURAL RESOURCES
ENVIRONMENTAL PROTECTION DIVISION
Approved
Solid Waste Management Program
Approved By: Keith Stevens
Digitally signed by Keith Stevens
Date: 2022.10.25 08:59:48 -04'00'

NO. 27185 PROFESSIONAL ENGINEER R. GRANT LAKE 9/27/22

No. 12687 PROFESSIONAL ENGINEER GARY H. McWHORTER 9/27/22

Southern Company Generation
Engineering and Construction Services
FOR
Georgia Power Company

PLANT WANSLEY
COAL COMBUSTION BY-PRODUCT DISPOSAL FACILITY
SITE TOPOGRAPHIC SURVEY

REVISION	DATE
0	09-23-2022
CCR LF PERMIT APPLICATION [BY HHNT, INC.]	

BY	CHK'D	CIVIL APPR	ELECT APPR	I/C APPR	MECH APPR	DISC MGR
ANR	RBL		☒	☒	☒	☒

SCALE	PROJ I.D.	DRAWING NUMBER	SHEET	CONT'D	REV
AS SHOWN	010209	**H1C11122**	1	FINAL	0

ANSI F: 40x28 Acad2008

SITE BOUNDARY AREA = 324.6 ACRES
NORTH ARROW
LOCATION MAP
PLANT WANSLEY
SITE
GA. POWER RD.
HOLLINGSWORTH FERRY RD.
S. BRIDGE RD.
FIVE NOTCH RD.
HEARD CO.
COWETA CO.
CHATTAHOOCHEE RIVER
YATES - YELLOW DIRT 230KV
GASTON (SEGCO) - YELLOW DIRT 230KV
GPC YELLOW DIRT - GRESTON T/L
SITE BOUNDARY
200' SITE BUFFER
LIMITS OF WASTE
500' WASTE LIMIT
ROAD LIMIT OF CLEARING AND GRUBBING
ROAD LIMITS OF CLEARING AND GRUBBING
25' STREAM BUFFER, (TYP.)
200' UNDISTURBED BUFFER
PERMITTED SITE BOUNDARY
PROPOSED LIMITS SITE ACCESS
HIGH UNDER-BRUSH
W O O D E D
STREAM
1/2" RBS ALONG THE SOUTHERLY PROPERTY LINE
HOLLINGSWORTH FERRY ROAD
GPCO P/L
GPC P/L
EXISTING FENCE
PROPOSED 25' SECURITY ROAD
HOLLINGSWORTH CEMETERY
P.O.B. 1/2" RBS W/ GPC CAP N1238318.965 E2023467.798 (STATE PLANE)
1/2" RBS W/ GPC CAP N1239889.313 E2029006.913 (STATE PLANE)
PT.50
PT.51
PT.52
PT.55
PT.56
PT.57
PT.58
PT.59
PT.61
PT.62
PT.65
PT.66
PT.67
PT.68
PT.69
PT.200
PT.202
PT.204
PT.206
N74°10'19"E 5757.41'
S32°08'41"E 595.03'
S34°10'52"E 591.79'
S33°34'32"E 708.39'
S40°16'59"E 1070.77'
S27°42'24"W 213.87'
S86°11'49"W 209.33'
S13°24'43"W 62.71'
S78°41'39"W 152.93'
S64°36'49"W 195.26'
N79°35'09"W 157.16'
S26°59'16"W 191.63'
S56°39'47"W 556.40'
S62°00'23"W 689.45'
N62°39'53"W Lc=514.59' A=524.49' R=776.97'
N42°13'41"W 81.47'
N38°48'40"W 348.05'
N57°03'50"W Lc=654.90' A=668.76' R=945.26'
N78°14'05"W 127.36'
N81°27'43"W 711.92'
N80°31'15"W 189.71'
N66°23'16"W Lc=432.26' A=437.31' R=829.03'
N51°58'56"W 125.22'
N50°40'14"W 363.32'
N65°15'20"W Lc=524.93' A=529.30' R=1188.49'
N74°13'33"W Lc=394.11' A=394.51' R=2527.16'
N78°34'51"W 274.26'
N67°03'05"W 142.85'
N64°33'49"W 245.81'
N62°41'53"W 314.10'
N59°00'52"W Lc=245.46' A=245.57' R=2395.17'
INV. EL.=670.3 INV. EL.=671.2
INV. EL.=669.1 INV. EL.=670.7 INV. EL.=671.4
84"CMP'S
N 1240000
N 1239000
N 1238000
N 1237000
N 1236000
E 2024000
E 2026000
E 2027000
E 2028000
E 2029000
GS-1 through GS-31
GRAPHIC SCALE
200 0 100 200 400 800
(IN FEET)
1 inch = 200 ft.
GLENLOCH
YELLOWDIRT
PROPOSED CCB DISPOSAL FACILITY
ZONE A
Pink Creek
Notch Road
Five
Chattahoochee River
APPROXIMATE SCALE: 1 inch = 2000 feet
2000 0 2000 4000

LEGEND:

LINE LEGEND

▬ ▪ ▪ ▬	Property Line
▬ · ▬ · ▬	Site Boundary
▬ ▬ ▬ ▬	Buffer Boundary
▬ ▬ ▬ ▬	Limits of Waste
▬ ▬ ▬ ▬	500' Waste Limit
— - - —	25' Wetland / Stream Buffer
▨	Wetland
—×—×—	Fence
— —840— —	Existing Contours
GS-1 Ⓦ	Bore Hole/Piezometer Location

FLOOD NOTE:

THIS SITE IS NOT WITHIN A 100-YEAR FLOOD HAZARD AREA AS PER HEARD COUNTY DEPARTMENT OF HOUSING & DEVELOPMENT COMMUNITY PANEL #1301050003 LAST REVISED 8/04/1986

REFERENCE DRAWINGS:

1. FOR A COMPLETE DRAWING LIST SEE SHEET H1C11120
2. COMPOSITE MAP OF PLANT WANSLEY COAL COMBUSTION BY-PRODUCT STORAGE FACILITY LAND DEPARTMENT MAP FILE NO. M-200.
3. GEORGIA POWER COMPANY LAND DEPARTMENT PROPERTY PLAT K-8-1, DATED 6-5-72.

REFERENCES:

DEPT. OF HOUSING AND URBAN DEVELOPMENT,
FEDERAL INSURANCE ADMINISTRATION,
HEARD CO., GA. (UNINC. AREAS)
FLOOD HAZARD BOUNDARY MAP 130105A, PAGE 4, APRIL 9, 1976

GEORGIA
DEPARTMENT OF NATURAL RESOURCES
ENVIRONMENTAL PROTECTION DIVISION
Approved
Solid Waste Management Program
Approved By: Keith Stevens Digitally signed by Keith Stevens Date: 2022.10.25 08:59:48 -04'00'

NO. 27185 PROFESSIONAL ENGINEER R. BRANT LAKE 9/27/22

Southern Company Generation
Engineering and Construction Services
FOR

Georgia Power Company

PLANT WANSLEY
COAL COMBUSTION BY-PRODUCT DISPOSAL FACILITY
SITE STREAM BUFFERS AND WETLANDS,
100 YEAR FLOOD PLAIN
AND BORING LOCATIONS

REVISION	DATE
0	09-23-2022
CCR LF PERMIT APPLICATION [BY HHNT, INC.]	

BY	CHK'D	CIVIL APPR	ELECT APPR	I/C APPR	MECH APPR	DISC MGR
ANR	RBL		☒	☒	☒	☒

SCALE	PROJ I.D.	DRAWING NUMBER	SHEET	CONT'D	REV
AS SHOWN	010209	**H1C11123**	1	FINAL	0

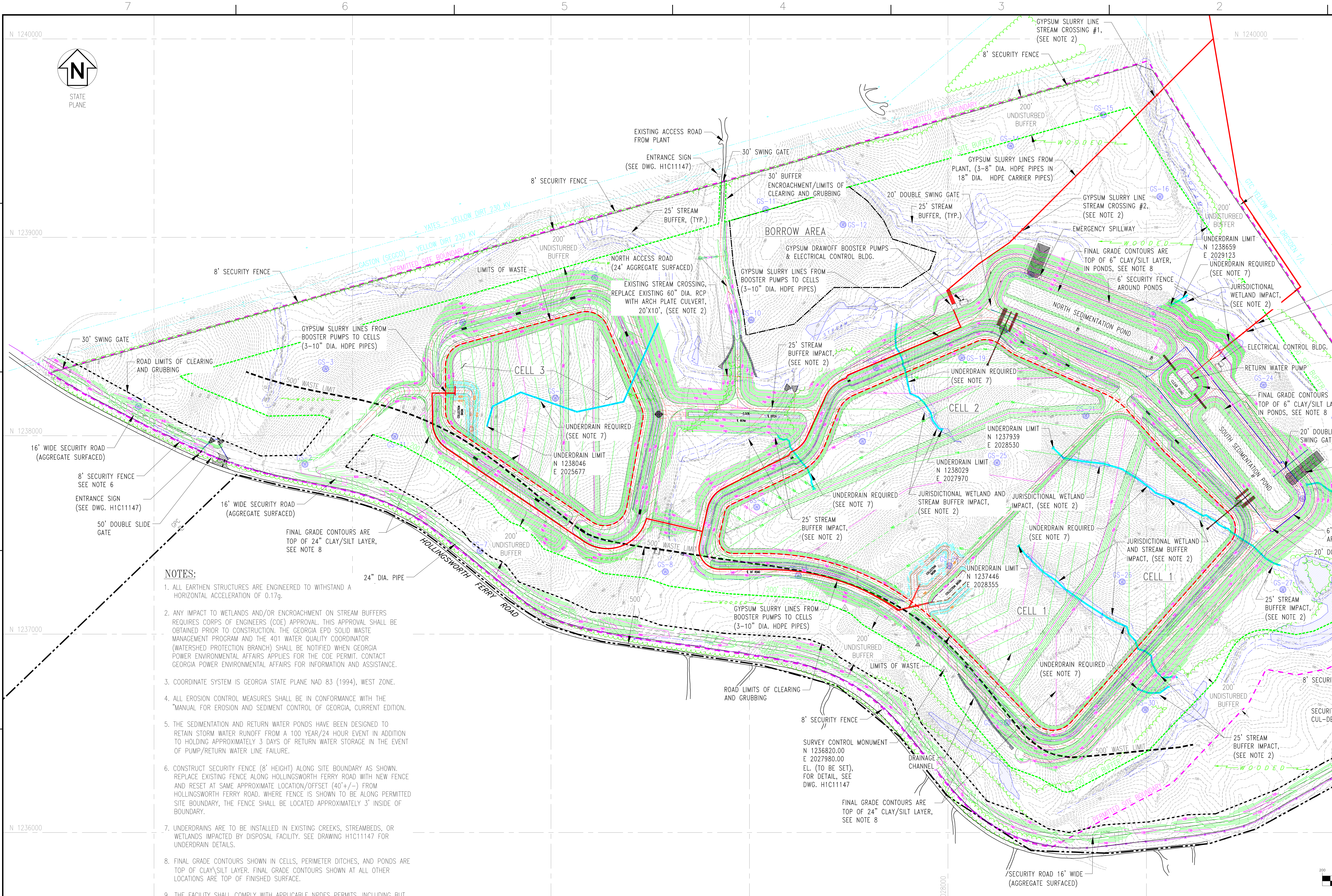

N
STATE PLANE
N 1240000
N 1239000
N 1238000
N 1237000
N 1236000
E 2024000
E 2025000
E 2026000
E 2027000
E 2028000
E 2029000
E 2030000
GYPSUM SLURRY LINE STREAM CROSSING #1, (SEE NOTE 2)
8' SECURITY FENCE
200' UNDISTURBED BUFFER
PERMITTED SITE BOUNDARY
WOODED
EXISTING ACCESS ROAD FROM PLANT
30' SWING GATE
ENTRANCE SIGN (SEE DWG. H1C11147)
30' BUFFER ENCROACHMENT/LIMITS OF CLEARING AND GRUBBING
GYPSUM SLURRY LINES FROM PLANT, (3–8" DIA. HDPE PIPES IN 18" DIA. HDPE CARRIER PIPES)
20' DOUBLE SWING GATE
25' STREAM BUFFER, (TYP.)
GYPSUM SLURRY LINE STREAM CROSSING #2, (SEE NOTE 2)
EMERGENCY SPILLWAY
BORROW AREA
GYPSUM DRAWOFF BOOSTER PUMPS & ELECTRICAL CONTROL BLDG.
GYPSUM SLURRY LINES FROM BOOSTER PUMPS TO CELLS (3–10" DIA. HDPE PIPES)
FINAL GRADE CONTOURS ARE TOP OF 6" CLAY/SILT LAYER, IN PONDS, SEE NOTE 8
6' SECURITY FENCE AROUND PONDS
UNDERDRAIN LIMIT N 1238659 E 2029123
UNDERDRAIN REQUIRED (SEE NOTE 7)
JURISDICTIONAL WETLAND IMPACT, (SEE NOTE 2)
RETURN WATER LINE STREAM CROSSING, (SEE NOTE 2)
RETURN WATER LINES (2– 16" DIA. HDPE PIPES IN 30" DIA. HDPE CARRIER PIPES)
ELECTRICAL CONTROL BLDG.
RETURN WATER PUMP
8' SECURITY FENCE
25' STREAM BUFFER, (TYP.)
NORTH SEDIMENTATION POND
SOUTH SEDIMENTATION POND
20' DOUBLE SWING GATE
EMERGENCY SPILLWAY
UNDERDRAIN REQUIRED (SEE NOTE 7)
6' SECURITY FENCE AROUND PONDS
20' DOUBLE SWING GATE
84" CMP'S (EXISTING)
YATES – YELLOW DIRT 230 kV
GASTON (SEGCO) – YELLOW DIRT 230 kV
GPC YELLOW DIRT – DRESDEN 230
8' SECURITY FENCE
LIMITS OF WASTE
NORTH ACCESS ROAD (24' AGGREGATE SURFACED)
EXISTING STREAM CROSSING, REPLACE EXISTING 60" DIA. RCP WITH ARCH PLATE CULVERT, 20'X10', (SEE NOTE 2)
25' STREAM BUFFER IMPACT, (SEE NOTE 2)
UNDERDRAIN REQUIRED (SEE NOTE 7)
30' SWING GATE
ROAD LIMITS OF CLEARING AND GRUBBING
GYPSUM SLURRY LINES FROM BOOSTER PUMPS TO CELLS (3–10" DIA. HDPE PIPES)
500' WASTE LIMIT
CELL 3
UNDERDRAIN REQUIRED (SEE NOTE 7)
UNDERDRAIN LIMIT N 1238046 E 2025677
CELL 2
UNDERDRAIN LIMIT N 1237939 E 2028530
UNDERDRAIN LIMIT N 1238029 E 2027970
UNDERDRAIN REQUIRED (SEE NOTE 7)
JURISDICTIONAL WETLAND AND STREAM BUFFER IMPACT, (SEE NOTE 2)
JURISDICTIONAL WETLAND IMPACT, (SEE NOTE 2)
UNDERDRAIN REQUIRED (SEE NOTE 7)
25' STREAM BUFFER IMPACT, (SEE NOTE 2)
JURISDICTIONAL WETLAND AND STREAM BUFFER IMPACT, (SEE NOTE 2)
CELL 1
UNDERDRAIN LIMIT N 1237446 E 2028355
25' STREAM BUFFER IMPACT, (SEE NOTE 2)
16' WIDE SECURITY ROAD (AGGREGATE SURFACED)
8' SECURITY FENCE SEE NOTE 6
ENTRANCE SIGN (SEE DWG. H1C11147)
50' DOUBLE SLIDE GATE
16' WIDE SECURITY ROAD (AGGREGATE SURFACED)
GPC
FINAL GRADE CONTOURS ARE TOP OF 24" CLAY/SILT LAYER, SEE NOTE 8
24" DIA. PIPE
200' UNDISTURBED BUFFER
HOLLINGSWORTH FERRY ROAD
200' SITE BUFFER
GYPSUM SLURRY LINES FROM BOOSTER PUMPS TO CELLS (3–10" DIA. HDPE PIPES)
200' UNDISTURBED BUFFER
LIMITS OF WASTE
ROAD LIMITS OF CLEARING AND GRUBBING
8' SECURITY FENCE
SURVEY CONTROL MONUMENT N 1236820.00 E 2027980.00 EL. (TO BE SET), FOR DETAIL, SEE DWG. H1C11147
DRAINAGE CHANNEL
FINAL GRADE CONTOURS ARE TOP OF 24" CLAY/SILT LAYER, SEE NOTE 8
UNDERDRAIN REQUIRED (SEE NOTE 7)
200' UNDISTURBED BUFFER
25' STREAM BUFFER IMPACT, (SEE NOTE 2)
HOLLINGSWORTH CEMETERY
8' SECURITY FENCE
ENTRANCE SIGN (SEE DWG. H1C11147)
30' SWING GATE
SECURITY ROAD CUL-DE-SAC
8' SECURITY FENCE
GPC
SECURITY ROAD 16' WIDE (AGGREGATE SURFACED)

LEGEND:

PROPERTY LINE
SITE BOUNDARY
200' SITE BUFFER
500' WASTE LIMIT
25' STREAM BUFFER
UNDERDRAIN
WETLANDS
EXISTING GROUND CONTOURS
FINAL GRADE CONTOURS
LIMITS OF WASTE
EXISTING FENCE
PROPOSED 8' SECURITY FENCE
GS-XX BOREHOLE – PIEZOMETER LOCATION
TREELINE

GRAPHIC SCALE
200 0 100 200 400 800
(IN FEET)
1 inch = 200 ft.

NOTES:

1. ALL EARTHEN STRUCTURES ARE ENGINEERED TO WITHSTAND A HORIZONTAL ACCELERATION OF 0.17g.
2. ANY IMPACT TO WETLANDS AND/OR ENCROACHMENT ON STREAM BUFFERS REQUIRES CORPS OF ENGINEERS (COE) APPROVAL. THIS APPROVAL SHALL BE OBTAINED PRIOR TO CONSTRUCTION. THE GEORGIA EPD SOLID WASTE MANAGEMENT PROGRAM AND THE 401 WATER QUALITY COORDINATOR (WATERSHED PROTECTION BRANCH) SHALL BE NOTIFIED WHEN GEORGIA POWER ENVIRONMENTAL AFFAIRS APPLIES FOR THE COE PERMIT. CONTACT GEORGIA POWER ENVIRONMENTAL AFFAIRS FOR INFORMATION AND ASSISTANCE.
3. COORDINATE SYSTEM IS GEORGIA STATE PLANE NAD 83 (1994), WEST ZONE.
4. ALL EROSION CONTROL MEASURES SHALL BE IN CONFORMANCE WITH THE "MANUAL FOR EROSION AND SEDIMENT CONTROL OF GEORGIA, CURRENT EDITION.
5. THE SEDIMENTATION AND RETURN WATER PONDS HAVE BEEN DESIGNED TO RETAIN STORM WATER RUNOFF FROM A 100 YEAR/24 HOUR EVENT IN ADDITION TO HOLDING APPROXIMATELY 3 DAYS OF RETURN WATER STORAGE IN THE EVENT OF PUMP/RETURN WATER LINE FAILURE.
6. CONSTRUCT SECURITY FENCE (8' HEIGHT) ALONG SITE BOUNDARY AS SHOWN. REPLACE EXISTING FENCE ALONG HOLLINGSWORTH FERRY ROAD WITH NEW FENCE AND RESET AT SAME APPROXIMATE LOCATION/OFFSET (40'+/–) FROM HOLLINGSWORTH FERRY ROAD. WHERE FENCE IS SHOWN TO BE ALONG PERMITTED SITE BOUNDARY, THE FENCE SHALL BE LOCATED APPROXIMATELY 3' INSIDE OF BOUNDARY.
7. UNDERDRAINS ARE TO BE INSTALLED IN EXISTING CREEKS, STREAMBEDS, OR WETLANDS IMPACTED BY DISPOSAL FACILITY. SEE DRAWING H1C11147 FOR UNDERDRAIN DETAILS.
8. FINAL GRADE CONTOURS SHOWN IN CELLS, PERIMETER DITCHES, AND PONDS ARE TOP OF CLAY\SILT LAYER. FINAL GRADE CONTOURS SHOWN AT ALL OTHER LOCATIONS ARE TOP OF FINISHED SURFACE.
9. THE FACILITY SHALL COMPLY WITH APPLICABLE NPDES PERMITS, INCLUDING BUT NOT LIMITED TO APPLICABLE NPDES CONSTRUCTION STORMWATER DISCHARGE GENERAL PERMITS, NPDES STORMWATER DISCHARGE PERMITS, AND THE FACILITY NPDES WASTEWATER DISCHARGE PERMITS.

REFERENCE DRAWINGS:

H1C11120 TITLE SHEET AND DRAWING INDEX

GEORGIA
DEPARTMENT OF NATURAL RESOURCES
ENVIRONMENTAL PROTECTION DIVISION
Approved
Solid Waste Management Program
Approved By: Keith Stevens Digitally signed by Keith Stevens Date: 2022.10.25 08:59:48 -04'00'

NO. 27185 R. GRANT LANE 9/27/22

GARY H. McWHORTER 9/27/22

Southern Company Services, Inc.
Copyright© Southern Company Services, Inc. All Rights Reserved

Southern Company Generation
Engineering and Construction Services
FOR
Georgia Power Company

PLANT WANSLEY
COAL COMBUSTION RESIDUALS (CCR) LANDFILL
GENERAL SITE DEVELOPMENT
CELL LAYOUT

REVISION	DATE	REVISION	DATE	REVISION	DATE	REVISION	DATE	REVISION	DATE	REVISION	DATE	REVISION 0	DATE 09-23-2022
												CCR LF PERMIT APPLICATION [BY HHNT, INC.]	

BY	CHK'D	CIVIL APPR	ELECT APPR	I/C APPR	MECH APPR	DISC MGR	SCALE	DRAWING NUMBER	SHEET	CONT'D	REV
ANR	RBL						1"=200'	**H1C11124**	1	FINAL	0

Acad2008 ANSI F: 40x28

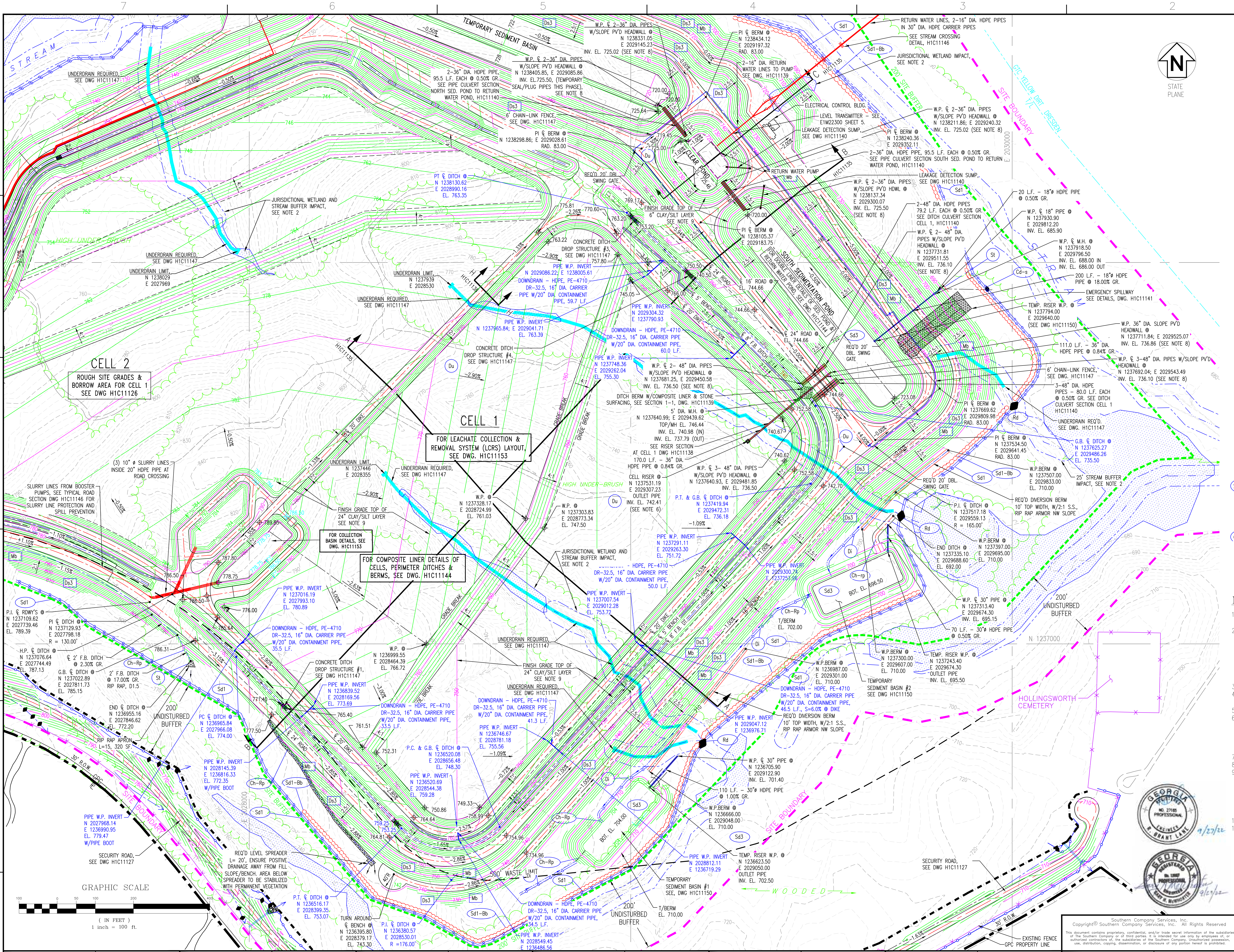
CELL 2
ROUGH SITE GRADES & BORROW AREA FOR CELL 1 SEE DWG H1C11126
CELL 1
FOR LEACHATE COLLECTION & REMOVAL SYSTEM (LCRS) LAYOUT, SEE DWG. H1C11153
FOR COLLECTION BASIN DETAILS, SEE DWG. H1C11153
FOR COMPOSITE LINER DETAILS OF CELLS, PERIMETER DITCHES & BERMS, SEE DWG. H1C11144
TEMPORARY SEDIMENT BASIN
SOUTH SEDIMENTATION POND
CLEAR POND
HOLLINGSWORTH CEMETERY
SITE BOUNDARY
STREAM
HIGH UNDER-BRUSH
W O O D E D
200' UNDISTURBED BUFFER
500' WASTE LIMIT
UNDERDRAIN REQUIRED, SEE DWG H1C11147
UNDERDRAIN LIMIT
JURISDICTIONAL WETLAND AND STREAM BUFFER IMPACT, SEE NOTE 2
FINISH GRADE TOP OF 24" CLAY/SILT LAYER SEE NOTE 9
CONCRETE DITCH DROP STRUCTURE #1, SEE DWG H1C11147
DOWNDRAIN - HDPE, PE-4710 DR-32.5, 16" DIA. CARRIER PIPE W/20" DIA. CONTAINMENT PIPE
SLURRY LINES FROM BOOSTER PUMPS, SEE TYPICAL ROAD SECTION DWG H1C11146 FOR SLURRY LINE PROTECTION AND SPILL PREVENTION
(3) 10" ø SLURRY LINES INSIDE 20" HDPE PIPE AT ROAD CROSSING
REQ'D LEVEL SPREADER L= 20', ENSURE POSITIVE DRAINAGE AWAY FROM FILL SLOPE/BENCH. AREA BELOW SPREADER TO BE STABILIZED WITH PERMANENT VEGETATION
SECURITY ROAD, SEE DWG H1C11127
TEMPORARY SEDIMENT BASIN #1, SEE DWG. H1C11150
TEMPORARY SEDIMENT BASIN #2 SEE DWG H1C11150
REQ'D DIVERSION BERM 10' TOP WIDTH, W/2:1 S.S., RIP RAP ARMOR NW SLOPE
RETURN WATER PUMP
ELECTRICAL CONTROL BLDG.
LEAKAGE DETECTION SUMP, SEE DWG H1C11140
EMERGENCY SPILLWAY SEE DETAILS, DWG. H1C11141
EXISTING FENCE
GPC PROPERTY LINE
STATE PLANE
N
GRAPHIC SCALE
(IN FEET)
1 inch = 100 ft.

LEGEND:

₱	PROPERTY LINE
	SITE BOUNDARY
	200' SITE BUFFER
	500' WASTE LIMIT
	STREAMS
	25' STREAM BUFFER
	LIMITS OF CLEARING (SECURITY ROAD)
	UNDERDRAIN EXTENTS (APPROXIMATE)
▨	WETLANDS
700	EXISTING GROUND CONTOURS
700	FINAL GRADE CONTOURS
	EXISTING SECURITY FENCE
	PROPOSED SECURITY FENCE
⌖ XXX.XX	SPOT ELEVATIONS
	TREELINE

EROSION CONTROL LEGEND

Sd1	SILT FENCE (SEE DWG H1C11149)
Di	DIVERSION (SEE DWG H1C11149)
Lv	LEVEL SPREADER
Du	DUST CONTROL
Cd-s	STONE CHECK DAM (2"-10" STONE) ◆
Sd3	TEMPORARY SEDIMENT BASIN
Ds3	DISTURBED AREA STABILIZATION (PERMANENT VEGETATION)
Sd1-Bb	BRUSH BARRIER
Rd	ROCK FILTER DAM ◆
Ch-rp	CHANNEL STABILIZATION (RIPRAP)
Mb	EROSION CONTROL MATTING
St	STORM DRAIN OUTLET PROTECTION

NOTES:

1. ALL EARTHEN STRUCTURES ARE ENGINEERED TO WITHSTAND A HORIZONTAL ACCELERATION OF 0.17g.
2. ANY IMPACT TO WETLANDS AND/OR ENCROACHMENT ON STREAM BUFFERS REQUIRES CORPS OF ENGINEERS (COE) APPROVAL. THIS APPROVAL SHALL BE OBTAINED PRIOR TO CONSTRUCTION. THE GEORGIA EPD SOLID WASTE MANAGEMENT PROGRAM AND THE 401 WATER QUALITY COORDINATOR (WATERSHED PROTECTION BRANCH) SHALL BE NOTIFIED WHEN GEORGIA POWER ENVIRONMENTAL AFFAIRS APPLIES FOR THE COE PERMIT. CONTACT GEORGIA POWER ENVIRONMENTAL AFFAIRS FOR INFORMATION AND ASSISTANCE.
3. COORDINATE SYSTEM IS GEORGIA STATE PLANE NAD 83 (1994), WEST ZONE.
4. ALL EROSION CONTROL MEASURES SHALL BE IN CONFORMANCE WITH THE "MANUAL FOR EROSION AND SEDIMENT CONTROL OF GEORGIA, CURRENT EDITION.
5. SEE DRAWING H1C11124 FOR SURVEY CONTROL MONUMENT LOCATION.
6. SEE DRAWING H1C11143 FOR DETAILS OF DECANT RISER STRUCTURE. UPON THE FILLING/STACKING OF GYPSUM TO LIMITS OF RISER, THE STRUCTURE SHALL BE FILLED WITH CONCRETE, ABANDONED AND REPLACED WITH A SIPHON DISCHARGE STRUCTURE. SEE GENERAL GYPSUM STACKING AND OPERATION PLAN, DWG H1C11142.
7. FOR TYPICAL ROADWAY SECTIONS SEE DRAWING H1C11146.
8. SEE DRAWING H1C11145 FOR TYPICAL HEADWALL DETAILS AND SECTIONS.
9. BASE GRADE ELEVATIONS SHOWN FOR THE CELLS AND POND BOTTOMS REPRESENT TOP OF CLAY/SILT LAYER. ADDITIONAL SAND OR SOIL/MARKER BED MATERIAL WILL BE REQUIRED ABOVE THIS SURFACE. SEE CELL AND POND COMPOSITE LINER DETAILS, DRAWING H1C11144. CELL NO. 2 SHOWN ON THIS DRAWING HAS NO LINER BUILDUP AND THE GRADES SHOWN AREA AT SUBGRADE ELEVATION (I.E. HDPE LINER ELEVATION MINUS 2 FEET).
10. REFER TO SHEET H1C11148 FOR TYPICAL DOWNDRAIN DETAILS.
11. THE FACILITY SHALL COMPLY WITH APPLICABLE NPDES PERMITS, INCLUDING BUT NOT LIMITED TO APPLICABLE NPDES CONSTRUCTION STORMWATER DISCHARGE GENERAL PERMITS, NPDES STORMWATER DISCHARGE PERMITS, AND THE FACILITY NPDES WASTEWATER DISCHARGE PERMITS.

NO. 27185 PROFESSIONAL ENGINEER R. BRANT LANE 9/27/22

No. 13907 PROFESSIONAL ENGINEER 9/29/22

GEORGIA
DEPARTMENT OF NATURAL RESOURCES
ENVIRONMENTAL PROTECTION DIVISION
Approved
Solid Waste Management Program
Approved By: Keith Stevens Digitally signed by Keith Stevens Date: 2022.10.25 08:59:48 -04'00'

Southern Company Generation
Engineering and Construction Services
FOR
Georgia Power Company

PLANT WANSLEY
COAL COMBUSTION RESIDUALS (CCR) LANDFILL
CELL NO. 1 SITE DEVELOPMENT
BASE GRADE PLAN

REVISION	DATE
REVISION 0	DATE 09-23-2022
CCR LF PERMIT APPLICATION [BY HHNT, INC.]	

BY	CHK'D	CIVIL APPR	ELECT APPR	I/C APPR	MECH APPR	DISC MGR
ANR	RBL		☒	☒	☒	☒

SCALE	DRAWING NUMBER	SHEET	CONT'D	REV
1"=100'	**H1C11125**	1	FINAL	0

Acad2008 ANSI F: 40x28

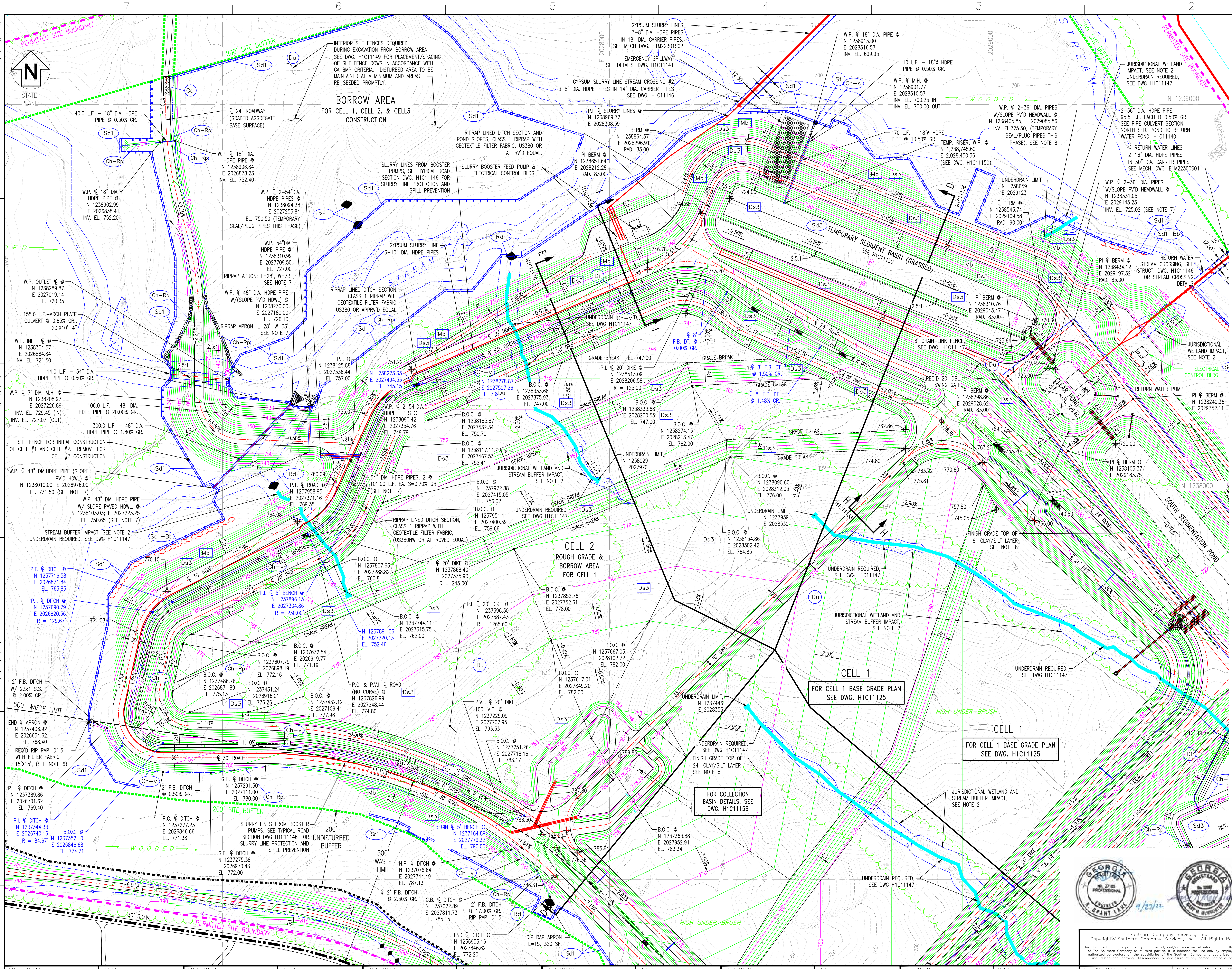
BORROW AREA
FOR CELL 1, CELL 2, & CELL3 CONSTRUCTION
CELL 2
ROUGH GRADE & BORROW AREA FOR CELL 1
CELL 1
FOR CELL 1 BASE GRADE PLAN SEE DWG. H1C11125
TEMPORARY SEDIMENT BASIN (GRASSED)
SEE H1C11150
SOUTH SEDIMENTATION POND
CLEAR POND
FOR COLLECTION BASIN DETAILS, SEE DWG. H1C11153
PERMITTED SITE BOUNDARY
200' SITE BUFFER
500' WASTE LIMIT
200' UNDISTURBED BUFFER
STREAM
WOODED
HIGH UNDER-BRUSH
STATE PLANE
N
E 2028000
E 2029000
N 1239000
N 1238000
INTERIOR SILT FENCES REQUIRED DURING EXCAVATION FROM BORROW AREA SEE DWG. H1C11149 FOR PLACEMENT/SPACING OF SILT FENCE ROWS IN ACCORDANCE WITH GA BMP CRITERIA. DISTURBED AREA TO BE MAINTAINED AT A MINIMUM AND AREAS RE-SEEDED PROMPTLY.
GYPSUM SLURRY LINES 3-8" DIA. HDPE PIPES IN 18" DIA. CARRIER PIPES, SEE MECH DWG. E1M22301S02
EMERGENCY SPILLWAY SEE DETAILS, DWG. H1C11141
GYPSUM SLURRY LINE STREAM CROSSING #2 3-8" DIA. HDPE PIPES IN 14" DIA. CARRIER PIPES, SEE DWG. H1C11146
RIPRAP LINED DITCH SECTION AND POND SLOPES, CLASS 1 RIPRAP WITH GEOTEXTILE FILTER FABRIC, US380 OR APPRV'D EQUAL.
SLURRY LINES FROM BOOSTER PUMPS, SEE TYPICAL ROAD SECTION DWG. H1C11146 FOR SLURRY LINE PROTECTION AND SPILL PREVENTION
SLURRY BOOSTER FEED PUMP & ELECTRICAL CONTROL BLDG.
GYPSUM SLURRY LINE 3-10" DIA. HDPE PIPES
JURISDICTIONAL WETLAND IMPACT, SEE NOTE 2 UNDERDRAIN REQUIRED, SEE DWG H1C11147
JURISDICTIONAL WETLAND AND STREAM BUFFER IMPACT, SEE NOTE 2
STREAM BUFFER IMPACT, SEE NOTE 2 UNDERDRAIN REQUIRED, SEE DWG H1C11147
UNDERDRAIN REQUIRED, SEE DWG H1C11147
UNDERDRAIN LIMIT
FINISH GRADE TOP OF 6" CLAY/SILT LAYER SEE NOTE 8
FINISH GRADE TOP OF 24" CLAY/SILT LAYER SEE NOTE 8
6' CHAIN-LINK FENCE, SEE DWG. H1C11147
REQ'D 20' DBL SWING GATE
RETURN WATER PUMP
RETURN WATER STREAM CROSSING, SEE STRUCT. DWG. H1C11146 FOR STREAM CROSSING DETAILS
ELECTRICAL CONTROL BLDG.
SILT FENCE FOR INITIAL CONSTRUCTION OF CELL #1 AND CELL #2. REMOVE FOR CELL #3 CONSTRUCTION
REQ'D RIP RAP, D1.5, WITH FILTER FABRIC 15'X15', (SEE NOTE 6)
24' ROAD
30' ROAD
20' DIKE
30' R.O.W.
GRADE BREAK
A
B
C
D
E
F
1
2
3
4
5
6
7

LEGEND:

	PROPERTY LINE
	SITE BOUNDARY
	200' SITE BUFFER
	500' WASTE LIMIT
	STREAMS
	25' STREAM BUFFER
	LIMITS OF CLEARING (SECURITY ROAD)
	UNDERDRAIN EXTENTS (APPROXIMATE)
▨	WETLANDS
700	EXISTING GROUND CONTOURS
700	FINAL GRADE CONTOURS
	EXISTING SECURITY FENCE
	PROPOSED SECURITY FENCE
	TREELINE

EROSION CONTROL LEGEND

Sd1	SILT FENCE (SEE DWG. H1C11149)
Di	DIVERSION (SEE DWG. H1C11149)
Lv	LEVEL SPREADER
Du	DUST CONTROL
Cd-s	STONE CHECK DAM (2"-10" STONE) ◆
Sd3	TEMPORARY SEDIMENT BASIN
Ds3	DISTURBED AREA STABILIZATION (PERMANENT VEGETATION)
Sd1-Bb	BRUSH BARRIER
Rd	ROCK FILTER DAM ◆
Ch-rp	CHANNEL STABILIZATION (RIPRAP)
Ch-v	CHANNEL STABILIZATION (VEGETATED)
Mb	EROSION CONTROL MATTING

NOTES:

1. ALL EARTHEN STRUCTURES ARE ENGINEERED TO WITHSTAND A HORIZONTAL ACCELERATION OF 0.17g.
2. ANY IMPACT TO WETLANDS AND/OR ENCROACHMENT ON STREAM BUFFERS REQUIRES CORPS OF ENGINEERS (COE) APPROVAL. THIS APPROVAL SHALL BE OBTAINED PRIOR TO CONSTRUCTION. THE GEORGIA EPD SOLID WASTE MANAGEMENT PROGRAM AND THE 401 WATER QUALITY COORDINATOR (WATERSHED PROTECTION BRANCH) SHALL BE NOTIFIED WHEN GEORGIA POWER ENVIRONMENTAL AFFAIRS APPLIES FOR THE COE PERMIT. CONTACT GEORGIA POWER ENVIRONMENTAL AFFAIRS FOR INFORMATION AND ASSISTANCE.
3. COORDINATE SYSTEM IS GEORGIA STATE PLANE NAD 83 (1994), WEST ZONE.
4. ALL EROSION CONTROL MEASURES SHALL BE IN CONFORMANCE WITH THE "MANUAL FOR EROSION AND SEDIMENT CONTROL OF GEORGIA, CURRENT EDITION.
5. SEE DRAWING H1C11124 FOR SURVEY CONTROL MONUMENT LOCATION.
6. FOR TYPICAL ROADWAY SECTIONS SEE DRAWING H1C11146.
7. SEE DRAWING H1C11145 FOR TYPICAL HEADWALL DETAILS AND SECTIONS.
8. BASE GRADE ELEVATIONS SHOWN FOR THE CELLS AND POND BOTTOMS REPRESENT TOP OF CLAY/SILT LAYER. ADDITIONAL SAND OR SOIL/MARKER BED MATERIAL WILL BE REQUIRED ABOVE THIS SURFACE. SEE CELL AND POND COMPOSITE LINER DETAILS, DRAWING H1C11144. CELL NO. 2 SHOWN ON THIS DRAWING HAS NO LINER BUILDUP AND THE GRADES SHOWN ARE AT SUBGRADE ELEVATION (I.E. HDPE LINER ELEVATION MINUS 2 FEET),
9. THE FACILITY SHALL COMPLY WITH APPLICABLE NPDES PERMITS, INCLUDING BUT NOT LIMITED TO APPLICABLE NPDES CONSTRUCTION STORMWATER DISCHARGE GENERAL PERMITS, NPDES STORMWATER DISCHARGE PERMITS, AND THE FACILITY NPDES WASTEWATER DISCHARGE PERMITS.

GRAPHIC SCALE

100 0 50 100 200 400

(IN FEET)
1 inch = 100 ft.

No. 27185 PROFESSIONAL ENGINEER R. GRANT LANE 9/27/22

No. 13907 PROFESSIONAL ENGINEER GARY K. McWHORTER 9/27/22

GEORGIA DEPARTMENT OF NATURAL RESOURCES
ENVIRONMENTAL PROTECTION DIVISION
Approved
Solid Waste Management Program
Approved By: Keith Stevens
Digitally signed by Keith Stevens
Date: 2022.10.25 08:59:48 -04'00'

Southern Company Generation
Engineering and Construction Services
FOR

Georgia Power Company

PLANT WANSLEY
COAL COMBUSTION RESIDUALS (CCR) LANDFILL
CELL NO.2 SITE DEVELOPMENT
ROUGH GRADE/BORROW PLAN

REVISION	DATE
0	09-23-2022
CCR LF PERMIT APPLICATION [BY HHNT, INC.]	

BY	CHK'D	CIVIL APPR	ELECT APPR	I/C APPR	MECH APPR	DISC MGR
ANR	RBL					

SCALE	DRAWING NUMBER	SHEET	CONT'D	REV
1"=100'	**H1C11126**	1	FINAL	0

Acad2008 ANSI F: 40x28

STATE PLANE
SITE BOUNDARY
200' SITE BUFFER
200' UNDISTURBED BUFFER
WOODED
HOLLINGSWORTH FERRY ROAD
30' R.O.W.
GPC PROPERTY LINE
℄ 16' SECURITY ROAD, (GRADED AGGREGATE BASE SURFACE)
TEMPORARY HAUL ROAD & SITE ENTRANCE ROAD
CONSTRUCTION DISTURBANCE NOT PERMITTED IN THE BUFFER AREA BETWEEN PERMITTED SITE BOUNDARY AND DISTURBANCE LIMITS (NO VEHICLES ALLOWED)
SECURITY FENCE DEMO EXISTING FENCE AND REPLACE WITH 8' CHAIN-LINK SECURITY FENCE, SEE DETAIL DWG. H1C11147
CULVERT (C-1) 50.0 L.F. - 36" DIA. HDPE CPP @ 4.00% GR.
CULVERT (C-2) 40.0 L.F. - 24" DIA. HDPE CPP @ 0.50% GR.
CULVERT (C-3) 100.0 L.F. - 30" DIA. HDPE CPP @ 1.50% GR.
CULVERT (C-4) 70.0 L.F. - 24" DIA. HDPE CPP @ 5.70% GR.
CULVERT (C-5) 50.0 L.F. - 30" DIA. HDPE CPP @ 0.50% GR.
CULVERT (C-6) 40.0 L.F. - 30" DIA. HDPE CPP @ 0.50% GR.
CULVERT (C-7) 75.0 L.F. - 24" DIA. HDPE CPP @ 0.50% GR.
CULVERT (C-9) 88.0 L.F. 18" DIA. HDPE CPP @ 1.50% GR.
NEW FENCE TO BE RESET WITHIN THE PRESENT R.O.W. OF HOLLINGSWORTH FERRY ROAD
FOR CONTINUATION SEE THIS DRAWING MATCHLINE STA. 37+50
GRAPHIC SCALE
(IN FEET)
1 inch = 100 ft.

CULVERT TABLE

CULVERT NO.	DIAMETER	PIPE INLET/OUTLET COORDINATES	INVERT ELEVATION	LENGTH, (FT.)	OUTLET TREATMENT
C-1	36"	N 1237932.67 E 2024242.86 N 1237967.08 E 2024279.13	814.00 812.00	50.0	APRON La=30.0', W=33.0'
C-2	24"	N 1237466.00 E 2025510.00 N 1237497.30 E 2025535.00	792.00 791.80	40.0	GRASSED
C-3	30"	N 1237079.50 E 2026426.40 N 1237079.50 E 2026426.40	774.00 772.50	100.0	APRON La=22.5', w=25.0
C-4	24"	N 1236258.00 E 2028000.00 N 1236300.00 E 2028056.00	748.00 744.00	70.0	APRON La=24', W=26.0'
C-5	30"	N 1235950.00 E 2028665.50 N 1235996.00 E 1235996.00	731.25 731.00	50.0	GRASSED
C-6	30"	N 1236048.00 E 2029413.80 N 1236087.30 E 2029406.00	720.20 720.00	40.0	GRASSED
C-7	24"	N 1236474.70 E 2030137.70 N 1236420.00 E 2030189.00	701.00 700.00	75.0	GRASSED
C-8	24"	N 1237217.20 E 2026718.00 N 1237287.80 E 2026657.50	769.40 768.40	93.0	GRASSED
C-9	18"	N 1237879.24 E 2024373.61 N 1237955.20 E 2024329.15	811.00 809.68	88.0	APRON La=20.0', W=35.0'

LEGEND:

▬ ▪ ▬ ℄ ▬	PROPERTY LINE
▪▪▪▪	SITE BOUNDARY
▬ ▬ ▬	200' UNDISTURBED BUFFER
— — —	500' WASTE BUFFER
—··—	STREAMS
—·—·—	25' STREAM AND WETLAND BUFFER
— · — ·	LIMITS OF CLEARING (SECURITY ROAD)
▨	WETLANDS
----- 700 -----	EXISTING GROUND CONTOURS
—— 700 ——	FINAL GRADE CONTOURS
—×——×—	EXISTING SECURITY FENCE
—o—o—o—	PROPOSED SECURITY FENCE
⌒⌒⌒⌒	TREELINE

EROSION CONTROL LEGEND

Sd1	SILT FENCE (SEE H1C11149)
Di	DIVERSION (SEE H1C11149)
Lv	LEVEL SPREADER
Du	DUST CONTROL
Cd-s	STONE CHECK DAM (2"-10" STONE) ◆ ◆
Sd3	TEMPORARY SEDIMENT BASIN
Ds3	DISTURBED AREA STABILIZATION (PERMANENT VEGETATION)
St	STORMDRAIN OUTLET PROTECTION
Su	SURFACE ROUGHENING
Co	CONSTRUCTION EXIT ▨
Ch-v	CHANNEL VEGETATIVE LINING
Ch-rp	CHANNEL STABILIZATION (RIPRAP)

REFERENCES:

H1C11120 TITLE SHEET AND DRAWING INDEX
H1C11128 SECURITY ROAD PROFILE
H1C11146 CELL NO.1 THROUGH CELL NO. 3 MISCELLANEOUS SECTIONS, SHEET 4
H1C11149 EROSION AND SEDIMENTATION CONTROL DETAILS, SHEET 1
H1C11150 EROSION AND SEDIMENTATION CONTROL DETAILS, SHEET 2

GEORGIA
DEPARTMENT OF NATURAL RESOURCES
ENVIRONMENTAL PROTECTION DIVISION
Approved
Solid Waste Management Program
Approved By: Keith Stevens
Digitally signed by Keith Stevens
Date: 2022.10.25 08:59:48 -04'00'

NOTES:

1. ALL EARTHEN STRUCTURES ARE ENGINEERED TO WITHSTAND A HORIZONTAL ACCELERATION OF 0.17g.
2. ANY IMPACT TO WETLANDS AND/OR ENCROACHMENT ON STREAM BUFFERS REQUIRES CORPS OF ENGINEERS (COE) APPROVAL. THIS APPROVAL SHALL BE OBTAINED PRIOR TO CONSTRUCTION. THE GEORGIA EPD SOLID WASTE MANAGEMENT PROGRAM AND THE 401 WATER QUALITY COORDINATOR (WATERSHED PROTECTION BRANCH) SHALL BE NOTIFIED WHEN GEORGIA POWER ENVIRONMENTAL AFFAIRS APPLIES FOR THE COE PERMIT. CONTACT GEORGIA POWER ENVIRONMENTAL AFFAIRS FOR INFORMATION AND ASSISTANCE.
3. FOR TYPICAL ROAD SECTIONS SEE DETAILS, DRAWING H1C11146. ALL ROAD AND DITCH SIDE SLOPES SHALL BE 3:1 MAX. (3 HORIZ. TO 1 VERT.) UNLESS NOTED OTHERWISE.
4. FOR CENTERLINE PROFILE OF SECURITY ROAD, SEE DRAWING H1C11128.
5. ALL EROSION CONTROL MEASURES SHALL BE IN CONFORMANCE WITH THE "MANUAL FOR EROSION AND SEDIMENT CONTROL OF GEORGIA, CURRENT EDITION.
6. COORDINATE SYSTEM IS GEORGIA STATE PLANE NAD 83 (1994) WEST ZONE.

NO. 27165 R. GRANT LANE 9/27/22
GARY H. MCWHORTER 9/29/22

REVISION 0 DATE 09-23-2022
CCR LF PERMIT APPLICATION [BY HHNT, INC.]

BY	CHK'D	CIVIL APPR	ELECT APPR	I/C APPR	MECH APPR	DISC MGR
ANR	RBL		☒	☒	☒	☒

Southern Company Generation
Engineering and Construction Services
FOR

Georgia Power Company

PLANT WANSLEY
COAL COMBUSTION BY-PRODUCT DISPOSAL FACILITY
SITE DEVELOPMENT
SECURITY ROAD PLAN

SCALE	DRAWING NUMBER	SHEET	CONT'D	REV
1"=100'	**H1C11127**	1	FINAL	0

Acad2008 ANSI F: 40x28

REFERENCES:

H1C11120 TITLE SHEET AND DRAWING INDEX
H1C11127 SECURITY ROAD LAYOUT AND GRADING PLAN
H1C11131 CELL NO. 2 SITE DEVELOPMENT, BASE GRADING PLAN
H1C11146 CELL NO. 1 THROUGH CELL NO. 3 MISCELLANEOUS SECTIONS, SHEET 4

BEGIN ROAD @ STA. 0+00.00 EL. 850.09 (PROP.) EL. 847.08 (EXIST.)
210' V.C.
e= −1.87'
PVC STA. 2+05.20 EL. 852.05
PVI STA. 3+10.20 EL. 853.06
PVT STA. 4+15.20 EL. 846.59
+0.96%
℄ ROADWAY EXISTING GRADE
−6.16%
℄ ROADWAY PROPOSED GRADE
150.00' V.C.
e= +0.65'
PVC STA. 7+21.82 EL. 827.71
PVI STA. 7+96.82 EL. 823.09
PVT STA. 8+71.82 EL. 821.08
−2.67%
+1.86%
ENTRANCE ROAD EDGE STA. 10+15.79 EL. 817.24
END STATIONING P.I. ℄ ENTRANCE ROAD STA. 10+38.87 EL. 817.67
BEGIN STATIONING ENTRANCE ROAD ℄ STA. 12+96.09 EL. 822.74
ENTRANCE ROAD EDGE STA. 13+96.45 EL. 828.16
150.00' V.C.
e= −2.37'
PVC STA. 14+15.19 EL. 829.13
PVI STA. 14+90.19 EL. 833.04
PVT STA. 15+65.19 EL. 827.48
+5.21%
−7.41%
100.00' V.C.
e= +0.47'
PVC STA. 17+21.50 EL. 815.95
PVI STA. 17+71.50 EL. 812.24
PVT STA. 18+21.50 EL. 810.41
℄ ROADWAY EXISTING GRADE
−3.67%
℄ ROADWAY PROPOSED GRADE
380.00' V.C.
e= +3.66'
PVC STA. 21+43.97 EL. 798.59
PVI STA. 23+33.97 EL. 791.63
PVT STA. 25+23.97 EL. 799.29
+4.03%
320' V.C.
e= −4.38'
PVC STA. 27+20.82 EL. 807.24
PVI STA. 28+80.82 EL. 813.69
PVT STA. 30+40.82 EL. 802.61
−6.92%
640' V.C.
e= +10.31'
PVC STA. 31+58.25 EL. 794.48
PVI STA. 35+00.96 EL. 772.32
PVT STA. 37+98.25 EL. 791.54
870
860
850
840
830
820
810
800
790
780
770
760
750
740
730
720
710
700
EXIST. EL.
PROPOSED EL.

STATION	EXIST. EL.	PROPOSED EL.
1+00	859.95	851.05
2+00	854.85	852.00
3+00	845.48	851.44
4+00	849.64	847.49
5+00	847.00	841.37
6+00	838.76	835.21
7+00	829.84	829.05
8+00	820.71	823.61
9+00	814.66	820.33
10+00	816.85	817.66
12+00		
13+00	823.00	
14+00	828.18	828.35
15+00	828.02	830.52
16+00	821.84	824.95
17+00	817.32	817.54
18+00	811.34	811.29
19+00	808.83	807.53
20+00	805.87	803.87
21+00	803.12	800.20
22+00	795.96	796.85
23+00	797.22	795.33
24+00	793.65	795.84
25+00	794.39	798.36
26+00	795.11	802.36
27+00	807.64	806.39
28+00	815.70	809.36
29+00	817.79	808.97
30+00	805.09	805.16
31+00	793.14	797.71
32+00	781.08	791.77
33+00	774.38	786.70
34+00	776.02	783.65
35+00	779.22	782.63
36+00	782.13	783.62
37+00	786.86	786.64
38+00	793.50	791.65

SECURITY ROAD PROFILE
SCALE H: 1"=100', V: 1"=10'

PVT STA. 37+98.25 EL. 791.54
+6.01%
360.00' V.C.
e= −5.43'
PVC STA.40+10.56 EL. 804.30
PVI STA. 41+90.56 EL. 815.11
PVT STA. 43+70.56 EL. 804.18
−6.07%
℄ ROADWAY PROPOSED GRADE
220.00' V.C.
e= +1.22'
PVC STA. 52+21.66 EL. 752.48
PVI STA. 53+31.66 EL. 745.80
PVT STA. 54+41.66 EL. 744.01
℄ ROADWAY EXISTING GRADE
−1.63%
PVI STA 75+92.00 (NO CURVE) EL. 709.00
870
860
850
840
830
820
810
800
790
780
770
760
750
740
730
720
710
700

STATION	EXIST. EL.	PROPOSED EL.
38+00	793.50	791.65
39+00	795.23	795.234
40+00	807.59	807.592
41+00	819.00	808.33
42+00	817.83	809.66
43+00	809.78	807.64
44+00	799.57	802.39
45+00	789.43	796.31
46+00	785.60	790.24
47+00	773.07	784.17
48+00	775.79	778.09
49+00	778.82	772.02
50+00	770.61	765.95
51+00	759.85	759.87
52+00	747.17	753.80
53+00	749.78	748.34
54+00	741.81	744.86
55+00	737.52	743.06
56+00	736.13	741.43
57+00	734.06	739.80
58+00	738.64	738.18
59+00	735.73	736.55
60+00	739.43	734.92
61+00	739.42	733.29
62+00	729.46	731.66
63+00	725.87	730.04
64+00	729.60	728.41
65+00	731.64	726.78
66+00	726.39	725.15
67+00	725.90	723.52
68+00	727.50	721.89
69+00	721.25	720.27
70+00	716.36	718.64
71+00	717.64	717.01
72+00	714.77	715.38
73+00	711.31	713.75
74+00	706.18	712.13
75+00	703.84	710.05

NOTES:

1. FOR TYPICAL ROAD SECTIONS SEE DETAILS, DRAWING H1C11146.
2. FOR LAYOUT AND GRADING OF SECURITY ROAD SEE DRAWING H1C11127.

SECURITY ROAD PROFILE
SCALE H: 1"=100', V: 1"=10'

R. BRANT LANE
NO. 27185
9/27/22

GARY H. McWHORTER
9/27/22

GEORGIA
DEPARTMENT OF NATURAL RESOURCES
ENVIRONMENTAL PROTECTION DIVISION
Approved
Solid Waste Management Program
Approved By: Keith Stevens
Digitally signed by Keith Stevens
Date: 2022.10.25 08:59:48 -04'00'

REVISION	DATE	REVISION	DATE	REVISION	DATE	REVISION	DATE	REVISION 0	DATE 09-23-2022
								CCR LF PERMIT APPLICATION [BY HHNT, INC.]	

BY	CHK'D	CIVIL APPR	ELECT APPR	I/C APPR	MECH APPR	DISC MGR
ANR	RBL		☒	☒	☒	☒

Southern Company Services, Inc.

Southern Company Generation
Engineering and Construction Services
FOR
Georgia Power Company

PLANT WANSLEY
COAL COMBUSTION BY-PRODUCT DISPOSAL FACILITY
SITE DEVELOPMENT
SECURITY ROAD PROFILE

SCALE	DRAWING NUMBER	SHEET	CONT'D	REV
1"=100'	**H1C11128**	1	FINAL	0

Acad2008 ANSI F: 40x28

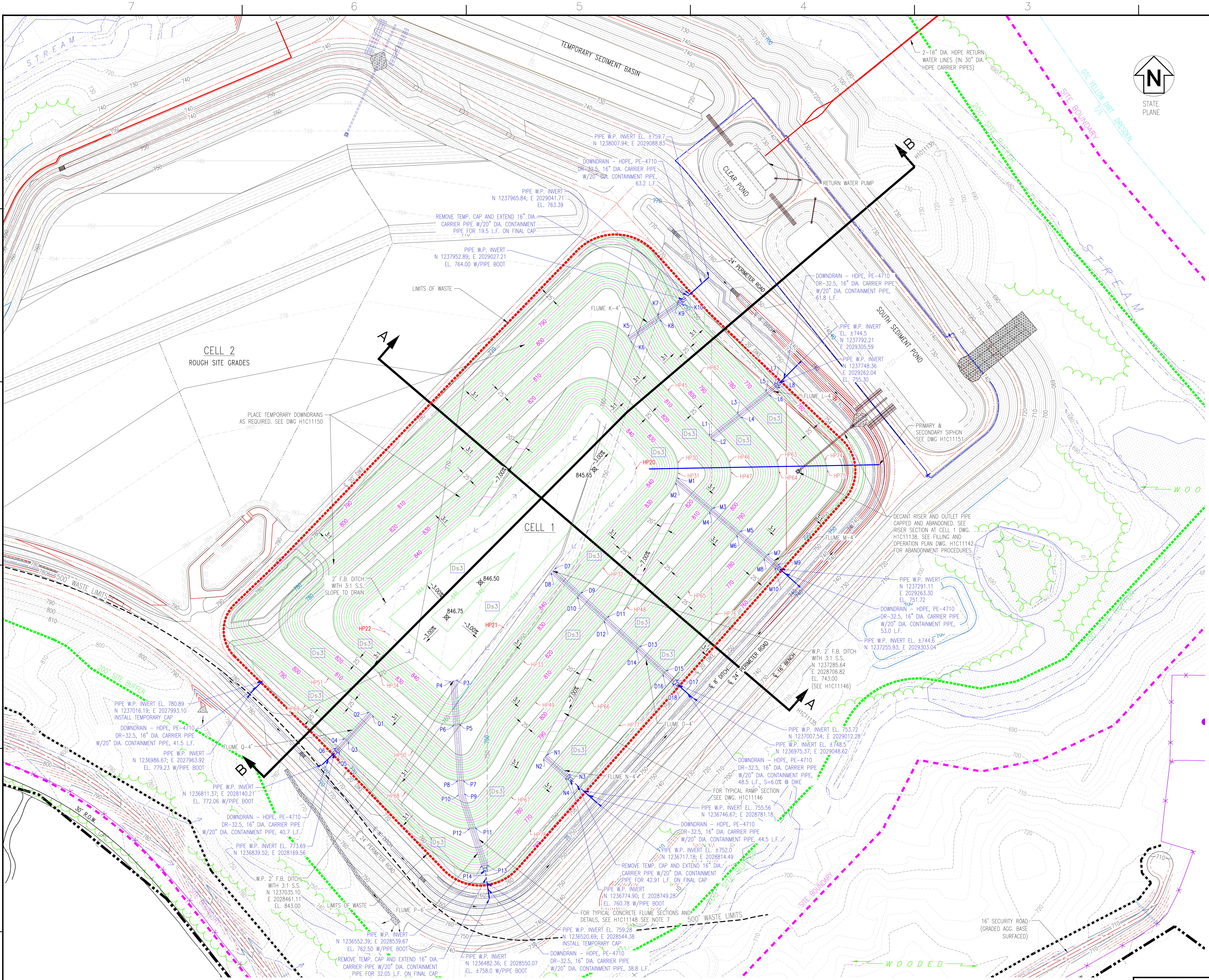
TEMPORARY SEDIMENT BASIN
STREAM
CLEAR POND
SOUTH SEDIMENT POND
CELL 2
ROUGH SITE GRADES
CELL 1
STATE PLANE
N
A
B
H1C11135
24' PERIMETER ROAD
℄ 24' PERIMETER ROAD
℄ 8' DITCH
℄ 20' DIKE
℄ 16' BENCH
200' SITE BUFFER
SITE BOUNDARY
500' WASTE LIMITS
500' WASTE LIMITS
30' R.O.W.
GPC
GTC YELLOW DIRT T/L DRESDEN
ELECTRICAL CONTROL BLDG.
W O O D E D
RETURN WATER PUMP
2-16" DIA. HDPE RETURN WATER LINES (IN 30" DIA. HDPE CARRIER PIPES)
PIPE W.P. INVERT EL. ±759.7 N 1238007.94; E 2029088.83
DOWNDRAIN – HDPE, PE-4710 DR-32.5, 16" DIA. CARRIER PIPE W/20" DIA. CONTAINMENT PIPE, 63.2 L.F.
PIPE W.P. INVERT N 1237965.84; E 2029041.71 EL. 763.39
REMOVE TEMP. CAP AND EXTEND 16" DIA. CARRIER PIPE W/20" DIA. CONTAINMENT PIPE FOR 19.5 L.F. ON FINAL CAP
PIPE W.P. INVERT N 1237952.89; E 2029027.21 EL. 764.00 W/PIPE BOOT
LIMITS OF WASTE
FLUME K-4'
DOWNDRAIN – HDPE, PE-4710 DR-32.5, 16" DIA. CARRIER PIPE W/20" DIA. CONTAINMENT PIPE, 61.8 L.F.
PIPE W.P. INVERT EL. ±744.5 N 1237792.21 E 2029305.59
PIPE W.P. INVERT N 1237748.36 E 2029262.04 EL. 755.30
FLUME L-4'
PRIMARY & SECONDARY SIPHON SEE DWG H1C11151
DECANT RISER AND OUTLET PIPE CAPPED AND ABANDONED. SEE RISER SECTION AT CELL 1 DWG. H1C11138. SEE FILLING AND OPERATION PLAN DWG. H1C11142 FOR ABANDONMENT PROCEDURES.
FLUME M-4'
PIPE W.P. INVERT N 1237291.11 E 2029263.30 EL. 751.72
DOWNDRAIN – HDPE, PE-4710 DR-32.5, 16" DIA. CARRIER PIPE W/20" DIA. CONTAINMENT PIPE, 53.0 L.F.
PIPE W.P. INVERT EL. ±744.6 N 1237255.93; E 2029303.04
W.P. 2' F.B. DITCH WITH 3:1 S.S. N 1237285.64 E 2028706.82 EL. 743.00 (SEE H1C11146)
PLACE TEMPORARY DOWNDRAINS AS REQUIRED. SEE DWG H1C11150
2' F.B. DITCH WITH 3:1 S.S. SLOPE TO DRAIN
845.65
846.50
846.75
FLUME D-4'
PIPE W.P. INVERT EL. 753.72 N 1237007.54; E 2029012.28
PIPE W.P. INVERT EL. ±748.5 N 1236975.37; E 2029048.62
DOWNDRAIN – HDPE, PE-4710 DR-32.5, 16" DIA. CARRIER PIPE W/20" DIA. CONTAINMENT PIPE, 48.5 L.F., S=6.0% @ DIKE
FOR TYPICAL RAMP SECTION SEE DWG. H1C11146
FLUME N-4'
PIPE W.P. INVERT EL. 755.56 N 1236746.67; E 2028781.18
DOWNDRAIN – HDPE, PE-4710 DR-32.5, 16" DIA. CARRIER PIPE W/20" DIA. CONTAINMENT PIPE, 44.5 L.F.
PIPE W.P. INVERT EL. ±752.0 N 1236717.18; E 2028814.49
REMOVE TEMP. CAP AND EXTEND 16" DIA. CARRIER PIPE W/20" DIA. CONTAINMENT PIPE FOR 42.91 L.F. ON FINAL CAP
PIPE W.P. INVERT N 1236774.90; E 2028749.28 EL. 760.78 W/PIPE BOOT
FOR TYPICAL CONCRETE FLUME SECTIONS AND DETAILS, SEE H1C11148 SEE NOTE 7
PIPE W.P. INVERT EL. 759.28 N 1236520.69; E 2028544.38 INSTALL TEMPORARY CAP
DOWNDRAIN – HDPE, PE-4710 DR-32.5, 16" DIA. CARRIER PIPE W/20" DIA. CONTAINMENT PIPE, 38.8 L.F.
PIPE W.P. INVERT N 1236482.36; E 2028550.07 EL. ±758.0 W/PIPE BOOT
REMOVE TEMP. CAP AND EXTEND 16" DIA. CARRIER PIPE W/20" DIA. CONTAINMENT PIPE FOR 32.05 L.F. ON FINAL CAP
PIPE W.P. INVERT N 1236552.39; E 2028539.67 EL. 762.50 W/PIPE BOOT
FLUME P-6'
LIMITS OF WASTE
W.P. 2' F.B. DITCH WITH 3:1 S.S. N 1237035.10 E 2028461.11 EL. 843.00
PIPE W.P. INVERT EL. 773.69 N 1236839.52; E 2028169.56
DOWNDRAIN – HDPE, PE-4710 DR-32.5, 16" DIA. CARRIER PIPE W/20" DIA. CONTAINMENT PIPE, 40.7 L.F.
PIPE W.P. INVERT N 1236811.37; E 2028140.21 EL. 772.06 W/PIPE BOOT
PIPE W.P. INVERT N 1236986.67; E 2027963.92 EL. 779.23 W/PIPE BOOT
FLUME Q-4'
DOWNDRAIN – HDPE, PE-4710 DR-32.5, 16" DIA. CARRIER PIPE W/20" DIA. CONTAINMENT PIPE, 41.5 L.F.
PIPE W.P. INVERT EL. 780.89 N 1237016.19; E 2027993.10 INSTALL TEMPORARY CAP
16' SECURITY ROAD (GRADED AGG. BASE SURFACED)
Ds3
3:1
25'
-3.00%
-7.00%
K1 K5 K6 K7 K8 K9 K10
L1 L2 L3 L4 L5 L6 L7 L8
M1 M2 M3 M4 M5 M6 M7 M8 M9 M10
D7 D8 D9 D10 D11 D12 D13 D14 D15 D16 D17 D18
N1 N2 N3 N4
P1 P3 P4 P5 P6 P7 P8 P9 P10 P11 P12 P13 P14
Q1 Q2 Q3 Q4 Q5 Q6
HP20 HP21 HP22 HP30 HP31 HP32 HP33 HP34 HP45 HP46 HP47 HP48 HP49 HP50 HP51 HP62 HP63 HP64 HP65 HP66 HP67 HP68 HP69 HP74 HP75 HP76 HP77 HP78

LEGEND:

—℄—	PROPERTY LINE
▬ ▬ ▬	SITE BOUNDARY
▬ ▬ ▬	200' SITE BUFFER
— — —	500' WASTE LIMIT
—·· —	STREAMS
—·—·—	25' STREAM BUFFER
— · — ·	LIMITS OF CLEARING (SECURITY ROAD)
- - - -	LIMITS OF WASTE
▨	WETLANDS
- - 700 - -	EXISTING GROUND CONTOURS
— 700 —	FINAL GRADE CONTOURS
—×—×—	EXISTING SECURITY FENCE
—○—○—	PROPOSED SECURITY FENCE
⌖ XXX.XX	SPOT ELEVATIONS
⌒⌒⌒	TREELINE

EROSION CONTROL LEGEND

Ds3	DISTURBED AREA STABILIZATION (PERMANENT VEGETATION)

REFERENCES:

H1C11120	TITLE SHEET AND DRAWING INDEX
H1C11135	CELL NO. 1, SECTIONS THRU STACK
H1C11146	MISCELLANEOUS SECTIONS AND DETAILS, SHEET 1
H1C11148	MISCELLANEOUS SECTIONS AND DETAILS, SHEET 3
H1C11151	SIPHON SECTIONS AND DETAILS
H1C11152	FLUME DATA SHEET

NOTES:

1. ALL EARTHEN STRUCTURES ARE ENGINEERED TO WITHSTAND A HORIZONTAL ACCELERATION OF 0.17g.
2. ANY IMPACT TO WETLANDS AND/OR ENCROACHMENT ON STREAM BUFFERS REQUIRES CORPS OF ENGINEERS (COE) APPROVAL. THIS APPROVAL SHALL BE OBTAINED PRIOR TO CONSTRUCTION. THE GEORGIA EPD SOLID WASTE MANAGEMENT PROGRAM AND THE 401 WATER QUALITY COORDINATOR (WATERSHED PROTECTION BRANCH) SHALL BE NOTIFIED WHEN GEORGIA POWER ENVIRONMENTAL AFFAIRS APPLIES FOR THE COE PERMIT. CONTACT GEORGIA POWER ENVIRONMENTAL AFFAIRS FOR INFORMATION AND ASSISTANCE.
3. COORDINATE SYSTEM IS GEORGIA STATE PLANE NAD 83 (1994), WEST ZONE.
4. ALL EROSION CONTROL MEASURES SHALL BE IN CONFORMANCE WITH THE "MANUAL FOR EROSION AND SEDIMENT CONTROL OF GEORGIA, CURRENT EDITION.
5. SEE DRAWING H1C11124 FOR SURVEY CONTROL MONUMENT LOCATION.
6. FOR TYPICAL ROADWAY/RAMP SECTIONS SEE DRAWING H1C11146.
7. PERMANENT DOWNDRAINS TO BE CONSTRUCTED UPON COMPLETION OF PLACEMENT OF FINAL COVER
8. REFER TO SHEET H1C11148 FOR TYPICAL DOWNDRAIN DETAILS.
9. THE FACILITY SHALL COMPLY WITH APPLICABLE NPDES PERMITS, INCLUDING BUT NOT LIMITED TO APPLICABLE NPDES CONSTRUCTION STORMWATER DISCHARGE GENERAL PERMITS, NPDES STORMWATER DISCHARGE PERMITS, AND THE FACILITY NPDES WASTEWATER DISCHARGE PERMITS.

GEORGIA
DEPARTMENT OF NATURAL RESOURCES
ENVIRONMENTAL PROTECTION DIVISION
Approved
Solid Waste Management Program
Approved By: Keith Stevens Digitally signed by Keith Stevens Date: 2022.10.25 08:59:48 -04'00'

NO. 27185 PROFESSIONAL ENGINEER R. BRANT LANE
9/27/22

9/29/22

GRAPHIC SCALE
100 0 50 100 200 400
(IN FEET)
1 inch = 100 ft.

Southern Company Generation
Engineering and Construction Services
FOR
Georgia Power Company

PLANT WANSLEY
COAL COMBUSTION RESIDUALS (CCR) LANDFILL
CELL NO. 1 SITE DEVELOPMENT
FINAL STACKING PLAN

REVISION	DATE	BY	CHK'D	CIVIL APPR	ELECT APPR	I/C APPR	MECH APPR	DISC MGR
0 CCR LF PERMIT APPLICATION [BY HHNT, INC.]	09-23-2022	ANR	RBL		╳	╳	╳	╳

SCALE	DRAWING NUMBER	SHEET	CONT'D	REV
1"=100'	**H1C11130**	1	FINAL	0

Acad2008 ANSI F: 40x28

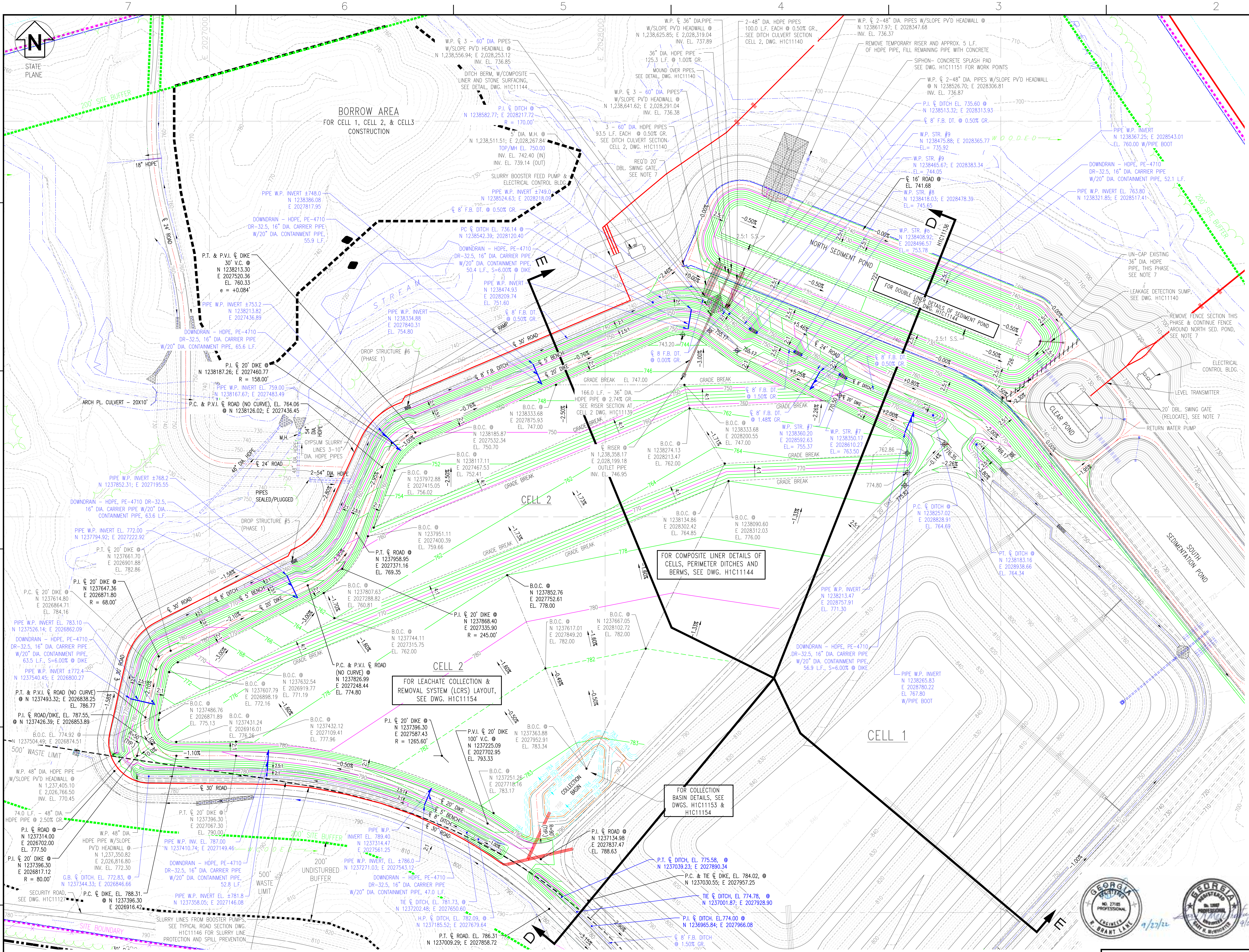
STATE PLANE
N
BORROW AREA FOR CELL 1, CELL 2, & CELL3 CONSTRUCTION
200' SITE BUFFER
STREAM
CELL 2
CELL 2
CELL 1
NORTH SEDIMENT POND
SOUTH SEDIMENTATION POND
CLEAR POND
COLLECTION BASIN
FOR DOUBLE LINER DETAILS OF SEDIMENT POND SEE DWG. H1C11144
FOR COMPOSITE LINER DETAILS OF CELLS, PERIMETER DITCHES AND BERMS, SEE DWG. H1C11144
FOR LEACHATE COLLECTION & REMOVAL SYSTEM (LCRS) LAYOUT, SEE DWG. H1C11154
FOR COLLECTION BASIN DETAILS, SEE DWGS. H1C11153 & H1C11154
500' WASTE LIMIT
200' UNDISTURBED BUFFER
SITE BOUNDARY
D
D
E
E
ELECTRICAL CONTROL BLDG.
LEVEL TRANSMITTER
RETURN WATER PUMP
DROP STRUCTURE #6 (PHASE 1)
DROP STRUCTURE #5 (PHASE 1)
PIPES SEALED/PLUGGED
ARCH PL. CULVERT - 20X10'

LEGEND:

	PROPERTY LINE
	SITE BOUNDARY
	200' SITE BUFFER
	500' WASTE LIMIT
	STREAMS
	25' STREAM BUFFER
	LIMITS OF CLEARING (SECURITY ROAD)
▨	WETLANDS
700	EXISTING GROUND CONTOURS
700	FINAL GRADE CONTOURS
×—×	EXISTING SECURITY FENCE
	PROPOSED SECURITY FENCE
⌖ XXX.XX	SPOT ELEVATIONS
	DOWNDRAIN
	TREELINE

EROSION CONTROL LEGEND

Sd1	SILT FENCE (SEE DWG. H1C11149)
Di	DIVERSION (SEE DWG. H1C11149)
Lv	LEVEL SPREADER
Du	DUST CONTROL
Cd-s	STONE CHECK DAM (2"-10" STONE) ◆
Sd3	TEMPORARY SEDIMENT BASIN
Ds3	DISTURBED AREA STABILIZATION (PERMANENT VEGETATION)
Sd1-Bb	BRUSH BARRIER
Rd	ROCK FILTER DAM ◆
Ch-rp	CHANNEL STABILIZATION (RIPRAP)
Ch-v	CHANNEL STABILIZATION (VEGETATED)
Mb	EROSION CONTROL MATTING

NOTES:

1. ALL EARTHEN STRUCTURES ARE ENGINEERED TO WITHSTAND A HORIZONTAL ACCELERATION OF 0.17g.
2. ANY IMPACT TO WETLANDS AND/OR ENCROACHMENT ON STREAM BUFFERS REQUIRES CORPS OF ENGINEERS (COE) APPROVAL. THIS APPROVAL SHALL BE OBTAINED PRIOR TO CONSTRUCTION. THE GEORGIA EPD SOLID WASTE MANAGEMENT PROGRAM AND THE 401 WATER QUALITY COORDINATOR (WATERSHED PROTECTION BRANCH) SHALL BE NOTIFIED WHEN GEORGIA POWER ENVIRONMENTAL AFFAIRS APPLIES FOR THE COE PERMIT. CONTACT GEORGIA POWER ENVIRONMENTAL AFFAIRS FOR INFORMATION AND ASSISTANCE.
3. COORDINATE SYSTEM IS GEORGIA STATE PLANE NAD 83 (1994), WEST ZONE.
4. ALL EROSION CONTROL MEASURES SHALL BE IN CONFORMANCE WITH THE "MANUAL FOR EROSION AND SEDIMENT CONTROL OF GEORGIA, CURRENT EDITION.
5. SEE DRAWING H1C11124 FOR SURVEY CONTROL MONUMENT LOCATION.
6. SEE DRAWING H1C11143 FOR DETAILS OF DECANT RISER STRUCTURE. UPON THE FILLING/STACKING OF GYPSUM TO LIMITS OF RISER, THE STRUCTURE SHALL BE FILLED WITH CONCRETE, ABANDONED AND REPLACED WITH A SIPHON DISCHARGE STRUCTURE. SEE GENERAL GYPSUM STACKING AND OPERATION PLAN, DWG. H1C11142.
7. FOR TYPICAL ROADWAY SECTIONS SEE DRAWING H1C11146.
8. SEE DRAWING H1C11145 FOR TYPICAL HEADWALL DETAILS AND SECTIONS.
9. BASE GRADE ELEVATIONS SHOWN FOR THE CELLS AND POND BOTTOMS REPRESENT TOP OF CLAY/SILT LAYER. ADDITIONAL SAND OR SOIL/MARKER BED MATERIAL WILL BE REQUIRED ABOVE THIS SURFACE. SEE CELL AND POND COMPOSITE LINER DETAILS, DRAWING H1C11144.
10. REFER TO SHEET H1C11148 FOR TYPICAL DOWNDRAIN DETAILS.
11. THE FACILITY SHALL COMPLY WITH APPLICABLE NPDES PERMITS, INCLUDING BUT NOT LIMITED TO APPLICABLE NPDES CONSTRUCTION STORMWATER DISCHARGE GENERAL PERMITS, NPDES STORMWATER DISCHARGE PERMITS, AND THE FACILITY NPDES WASTEWATER DISCHARGE PERMITS.

No. 27185 R. BRANT LANE 9/27/22

GARY H. McWHORTER 9/27/22

GRAPHIC SCALE

100 0 50 100 200 400

(IN FEET)
1 inch = 100 ft.

GEORGIA
DEPARTMENT OF NATURAL RESOURCES
ENVIRONMENTAL PROTECTION DIVISION
Approved
Solid Waste Management Program
Approved By: Keith Stevens Digitally signed by Keith Stevens Date: 2022.10.25 08:59:48 -04'00'

Southern Company Services, Inc.

REVISION 0 DATE 09-23-2022
CCR LF PERMIT APPLICATION [BY HHNT, INC.]

Southern Company Generation
Engineering and Construction Services
FOR
Georgia Power Company

PLANT WANSLEY
COAL COMBUSTION RESIDUALS (CCR) LANDFILL
CELL NO. 2 SITE DEVELOPMENT
BASE GRADING PLAN

BY	CHK'D	CIVIL APPR	ELECT APPR	I/C APPR	MECH APPR	DISC MGR	SCALE	DRAWING NUMBER	SHEET	CONT'D	REV
ANR	RBL		╳	╳	╳	╳	1"=100'	H1C11131	1	FINAL	0

Acad2008 ANSI F: 40x28

target ZERO Every day, every job, safely.

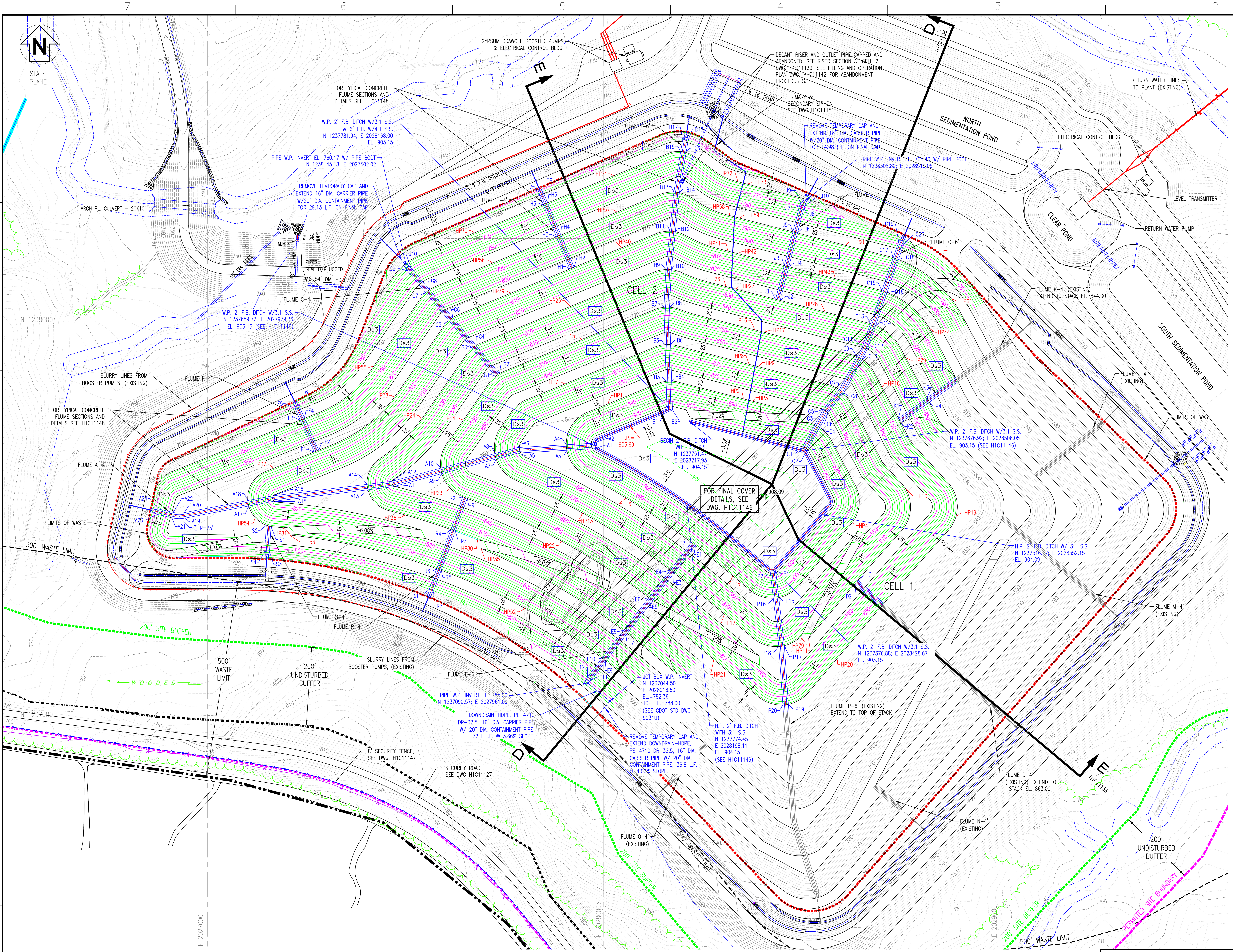
N
STATE PLANE
GYPSUM DRAWOFF BOOSTER PUMPS & ELECTRICAL CONTROL BLDG.
FOR TYPICAL CONCRETE FLUME SECTIONS AND DETAILS SEE H1C11148
W.P. 2' F.B. DITCH W/3:1 S.S. & 6' F.B. W/4:1 S.S. N 1237781.94; E 2028168.00 EL. 903.15
PIPE W.P. INVERT EL. 760.17 W/ PIPE BOOT N 1238145.18; E 2027502.02
REMOVE TEMPORARY CAP AND EXTEND 16" DIA. CARRIER PIPE W/20" DIA. CONTAINMENT PIPE FOR 29.13 L.F. ON FINAL CAP
ARCH PL. CULVERT - 20X10'
M.H.
54" DIA. HDPE
48" DIA. HDPE
PIPES SEALED/PLUGGED
2-54" DIA. HDPE
FLUME G-4'
FLUME B-6'
FLUME H-4'
℄ 8' F.B. DITCH
℄ 5' BENCH
W.P. 2' F.B. DITCH W/3:1 S.S. N 1237689.72; E 2027979.36 EL. 903.15 (SEE H1C11146)
N 1238000
DECANT RISER AND OUTLET PIPE CAPPED AND ABANDONED. SEE RISER SECTION AT CELL 2 DWG. H1C11139. SEE FILLING AND OPERATION PLAN DWG. H1C11142 FOR ABANDONMENT PROCEDURES.
℄ 16' ROAD
PRIMARY & SECONDARY SIPHON SEE DWG H1C11151
REMOVE TEMPORARY CAP AND EXTEND 16" DIA. CARRIER PIPE W/20" DIA. CONTAINMENT PIPE FOR 14.98 L.F. ON FINAL CAP
PIPE W.P. INVERT EL. 764.40 W/ PIPE BOOT N 1238308.80; E 2028510.05
NORTH SEDIMENTATION POND
FLUME J-4'
℄ 20' DIKE
FLUME C-6'
RETURN WATER LINES TO PLANT (EXISTING)
ELECTRICAL CONTROL BLDG.
LEVEL TRANSMITTER
CLEAR POND
RETURN WATER PUMP
FLUME K-4' (EXISTING) EXTEND TO STACK EL. 844.00
SOUTH SEDIMENTATION POND
FLUME L-4' (EXISTING)
LIMITS OF WASTE
CELL 2
CELL 1
SLURRY LINES FROM BOOSTER PUMPS, (EXISTING)
FLUME F-4'
FOR TYPICAL CONCRETE FLUME SECTIONS AND DETAILS SEE H1C11148
FLUME A-6'
LIMITS OF WASTE
500' WASTE LIMIT
℄ R=75'
BEGIN 2' F.B. DITCH WITH 3:1 S.S. N 1237751.47 E 2028217.93 EL. 904.15
H.P.= 903.69
FOR FINAL COVER DETAILS, SEE DWG. H1C11146
908.09
W.P. 2' F.B. DITCH W/3:1 S.S. N 1237676.92; E 2028506.05 EL. 903.15 (SEE H1C11146)
H.P. 2' F.B. DITCH W/ 3:1 S.S. N 1237516.17; E 2028552.15 EL. 904.09
W.P. 2' F.B. DITCH W/3:1 S.S. N 1237376.88; E 2028428.67 EL. 903.15
FLUME M-4' (EXISTING)
FLUME P-6' (EXISTING) EXTEND TO TOP OF STACK
FLUME S-4'
FLUME R-4'
FLUME E-6'
200' SITE BUFFER
500' WASTE LIMIT
200' UNDISTURBED BUFFER
WOODED
SLURRY LINES FROM BOOSTER PUMPS, (EXISTING)
PIPE W.P. INVERT EL. 785.00 N 1237090.57; E 2027961.09
DOWNDRAIN-HDPE, PE-4710 DR-32.5, 16" DIA. CARRIER PIPE W/ 20" DIA. CONTAINMENT PIPE, 72.1 L.F. @ 3.66% SLOPE.
JCT BOX W.P. INVERT N 1237044.50 E 2028016.60 EL.=782.36 TOP EL.=788.00 (SEE GDOT STD DWG 9031U)
H.P. 2' F.B. DITCH WITH 3:1 S.S. N 1237774.45 E 2028198.11 EL. 904.15 (SEE H1C11146)
REMOVE TEMPORARY CAP AND EXTEND DOWNDRAIN-HDPE, PE-4710 DR-32.5, 16" DIA. CARRIER PIPE W/ 20" DIA. CONTAINMENT PIPE, 36.8 L.F. @ 4.00% SLOPE.
8' SECURITY FENCE, SEE DWG. H1C11147
SECURITY ROAD, SEE DWG H1C11127
FLUME Q-4' (EXISTING)
FLUME D-4' (EXISTING) EXTEND TO STACK EL. 863.00
FLUME N-4' (EXISTING)
200' UNDISTURBED BUFFER
200' SITE BUFFER
500' WASTE LIMIT
PERMITTED SITE BOUNDARY
N 1237000
E 2027000
E 2028000
E 2029000
D H1C11136
E H1C11136
-7.02%
-6.08%
-7.16%
-3.0%
-6.97%
-7.00%
-1.00%
3:1
25'
20'
Ds3

LEGEND:

- PROPERTY LINE
- SITE BOUNDARY
- 200' UNDISTURBED BUFFER
- 500' WASTE LIMIT
- STREAMS
- 25' STREAM BUFFER
- LIMITS OF CLEARING (SECURITY ROAD)
- LIMITS OF WASTE
- WETLANDS
- 700 EXISTING GROUND CONTOURS
- 700 FINAL GRADE CONTOURS
- EXISTING SECURITY FENCE
- PROPOSED SECURITY FENCE
- TREELINE

EROSION CONTROL LEGEND

Ds3 DISTURBED AREA STABILIZATION (PERMANENT VEGETATION)

REFERENCES:

H1C11120	TITLE SHEET AND DRAWING INDEX
H1C11136	CELL NO. 1 & 2 COMBINED, SECTIONS THRU STACK
H1C11144	MISCELLANEOUS SECTIONS AND DETAILS, SHEET 3
H1C11146	MISCELLANEOUS SECTIONS AND DETAILS, SHEET 4
H1C11151	SIPHON SECTIONS AND DETAILS
H1C11152	FLUME DATA SHEET

NOTES:

1. ALL EARTHEN STRUCTURES ARE ENGINEERED TO WITHSTAND A HORIZONTAL ACCELERATION OF 0.17g.
2. ANY IMPACT TO WETLANDS AND/OR ENCROACHMENT ON STREAM BUFFERS REQUIRES CORPS OF ENGINEERS (COE) APPROVAL. THIS APPROVAL SHALL BE OBTAINED PRIOR TO CONSTRUCTION. THE GEORGIA EPD SOLID WASTE MANAGEMENT PROGRAM AND THE 401 WATER QUALITY COORDINATOR (WATERSHED PROTECTION BRANCH) SHALL BE NOTIFIED WHEN GEORGIA POWER ENVIRONMENTAL AFFAIRS APPLIES FOR THE COE PERMIT. CONTACT GEORGIA POWER ENVIRONMENTAL AFFAIRS FOR INFORMATION AND ASSISTANCE.
3. COORDINATE SYSTEM IS GEORGIA STATE PLANE NAD 83 (1994), WEST ZONE.
4. ALL EROSION CONTROL MEASURES SHALL BE IN CONFORMANCE WITH THE "MANUAL FOR EROSION AND SEDIMENT CONTROL OF GEORGIA, CURRENT EDITION.
5. SEE DRAWING H1C11149 FOR EROSION CONTROL NOTES.
6. SEE DRAWING H1C11124 FOR SURVEY CONTROL MONUMENT LOCATION.
7. FOR TYPICAL ROADWAY SECTIONS SEE DRAWING H1C11146.
8. THE FACILITY SHALL COMPLY WITH APPLICABLE NPDES PERMITS, INCLUDING BUT NOT LIMITED TO APPLICABLE NPDES CONSTRUCTION STORMWATER DISCHARGE GENERAL PERMITS, NPDES STORMWATER DISCHARGE PERMITS, AND THE FACILITY NPDES WASTEWATER DISCHARGE PERMITS.

CLOSURE AREAS:

CELL 1 CLOSURE AREA – 24.0 ACRES
CELL 2 CLOSURE AREA – 45.1 ACRES

GEORGIA
DEPARTMENT OF NATURAL RESOURCES
ENVIRONMENTAL PROTECTION DIVISION
Approved
Solid Waste Management Program
Approved By: Keith Stevens Digitally signed by Keith Stevens Date: 2022.10.25 08:59:48 -04'00'

NO. 27185 R. BRANT LANE 9/27/22

GARY H. McWHORTER 9/27/22

GRAPHIC SCALE
100 0 50 100 200 400
(IN FEET)
1 inch = 100 ft.

Southern Company Generation
Engineering and Construction Services
FOR
Georgia Power Company

PLANT WANSLEY
COAL COMBUSTION RESIDUALS (CCR) LANDFILL
CELL NO. 1 & 2 COMBINED
FINAL STACKING PLAN

REVISION 0 DATE 09-23-2022
CCR LF PERMIT APPLICATION [BY HHNT, INC.]

BY	CHK'D	CIVIL APPR	ELECT APPR	I/C APPR	MECH APPR	DISC MGR	SCALE	DRAWING NUMBER	SHEET	CONT'D	REV
ANR	RBL						1"=100'	**H1C11132**	1	FINAL	0

Acad2008 ANSI F: 40x28

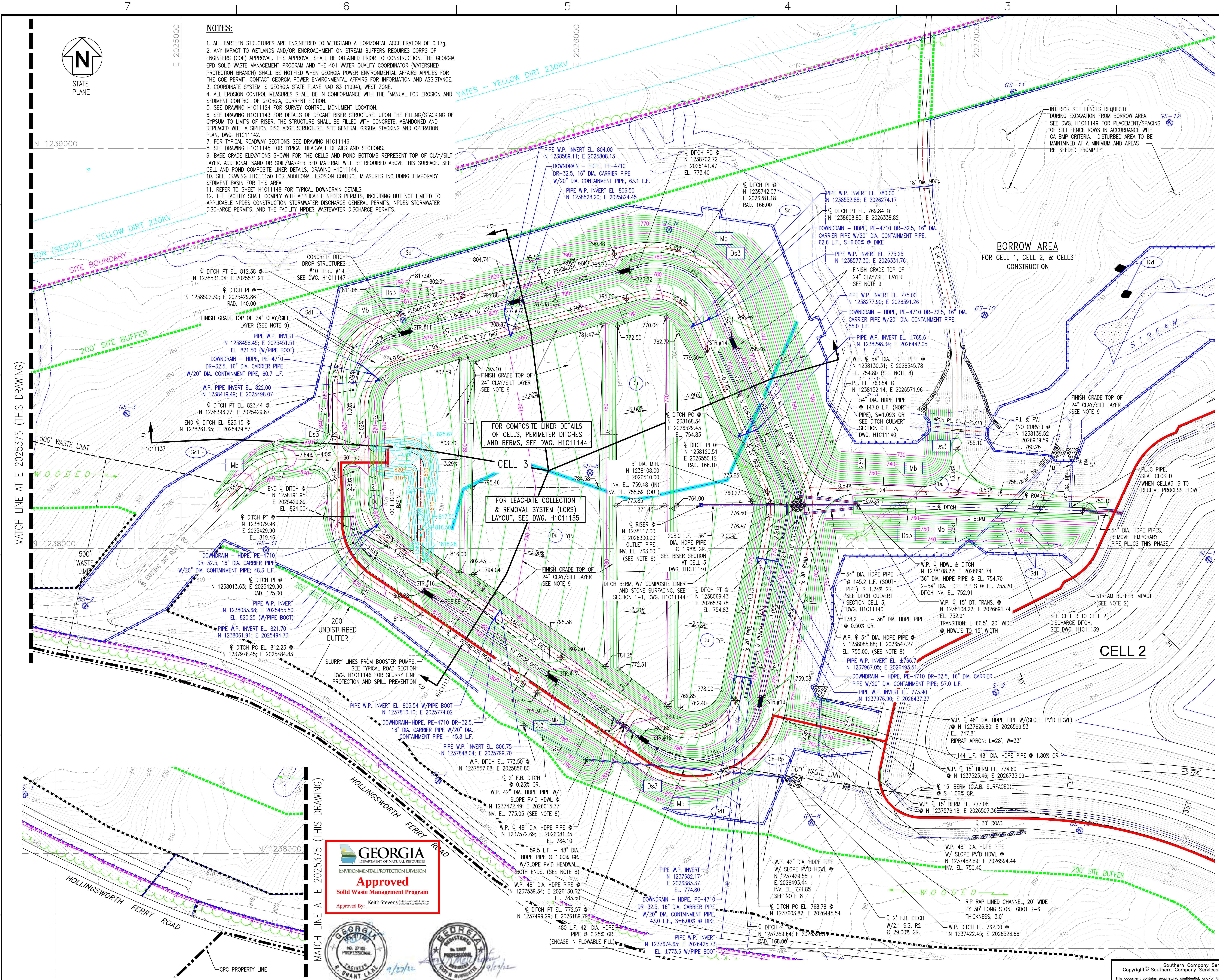
STATE PLANE
N
E 2025000
E 2026000
E 2027000
N 1239000
N 1238000
MATCH LINE AT E 2025375 (THIS DRAWING)
YATES – YELLOW DIRT 230KV
SITE BOUNDARY
290' SITE BUFFER
500' WASTE LIMIT
WOODED
HOLLINGSWORTH FERRY ROAD
EXISTING DIRT ROAD
200' UNDISTURBED BUFFER
BORROW AREA
FOR CELL 1, CELL 2, & CELL3 CONSTRUCTION
STREAM
CELL 3
CELL 2
FOR COMPOSITE LINER DETAILS OF CELLS, PERIMETER DITCHES AND BERMS, SEE DWG. H1C11144
FOR LEACHATE COLLECTION & REMOVAL SYSTEM (LCRS) LAYOUT, SEE DWG. H1C11155
CONCRETE DITCH DROP STRUCTURES #10 THRU #19, SEE DWG. H1C11147
FINISH GRADE TOP OF 24" CLAY/SILT LAYER (SEE NOTE 9)
INTERIOR SILT FENCES REQUIRED DURING EXCAVATION FROM BORROW AREA SEE DWG. H1C11149 FOR PLACEMENT/SPACING OF SILT FENCE ROWS IN ACCORDANCE WITH GA BMP CRITERIA. DISTURBED AREA TO BE MAINTAINED AT A MINIMUM AND AREAS RE-SEEDED PROMPTLY.
SLURRY LINES FROM BOOSTER PUMPS, SEE TYPICAL ROAD SECTION DWG. H1C11146 FOR SLURRY LINE PROTECTION AND SPILL PREVENTION
PLUG PIPE, SEAL CLOSED WHEN CELL 3 IS TO RECEIVE PROCESS FLOW
54" DIA. HDPE PIPES, REMOVE TEMPORARY PIPE PLUGS THIS PHASE
STREAM BUFFER IMPACT (SEE NOTE 2)
SEE CELL 3 TO CELL 2 DISCHARGE DITCH, SEE DWG. H1C11139
RIP RAP LINED CHANNEL, 20' WIDE BY 30' LONG STONE GDOT R-6 THICKNESS: 3.0'
DITCH BERM, W/ COMPOSITE LINER AND STONE SURFACING, SEE SECTION 1-1, DWG. H1C11144
5' DIA. M.H. N 1238108.00 E 2026510.00 INV. EL. 759.48 (IN) INV. EL. 755.59 (OUT)
℄ RISER N 1238117.00 E 2026300.00 OUTLET PIPE INV. EL. 763.60 (SEE NOTE 6)
208.0 L.F. -36" DIA. HDPE PIPE @ 1.98% GR. SEE RISER SECTION AT CELL 3 DWG. H1C11140
GPC PROPERTY LINE
GS-1
GS-2
GS-3
GS-5
GS-6
GS-8
GS-9
GS-10
GS-11
GS-12
GS-31
Sd1
Ds3
Mb
Du TYP.
Rd
Ch-Rp
STR. #11
STR. #12
STR. #13
STR. #14
STR. #16
STR. #17
STR. #18
STR. #19
℄ 24' PERIMETER ROAD
℄ 10' DITCH
℄ 20' DIKE
℄ 30' ROAD
℄ BERM
℄ DITCH
ARCH PL. CULV-20'x10'
F
G
H1C11137

NOTES:

1. ALL EARTHEN STRUCTURES ARE ENGINEERED TO WITHSTAND A HORIZONTAL ACCELERATION OF 0.17g.
2. ANY IMPACT TO WETLANDS AND/OR ENCROACHMENT ON STREAM BUFFERS REQUIRES CORPS OF ENGINEERS (COE) APPROVAL. THIS APPROVAL SHALL BE OBTAINED PRIOR TO CONSTRUCTION. THE GEORGIA EPD SOLID WASTE MANAGEMENT PROGRAM AND THE 401 WATER QUALITY COORDINATOR (WATERSHED PROTECTION BRANCH) SHALL BE NOTIFIED WHEN GEORGIA POWER ENVIRONMENTAL AFFAIRS APPLIES FOR THE COE PERMIT. CONTACT GEORGIA POWER ENVIRONMENTAL AFFAIRS FOR INFORMATION AND ASSISTANCE.
3. COORDINATE SYSTEM IS GEORGIA STATE PLANE NAD 83 (1994), WEST ZONE.
4. ALL EROSION CONTROL MEASURES SHALL BE IN CONFORMANCE WITH THE "MANUAL FOR EROSION AND SEDIMENT CONTROL OF GEORGIA, CURRENT EDITION.
5. SEE DRAWING H1C11124 FOR SURVEY CONTROL MONUMENT LOCATION.
6. SEE DRAWING H1C11143 FOR DETAILS OF DECANT RISER STRUCTURE. UPON THE FILLING/STACKING OF GYPSUM TO LIMITS OF RISER, THE STRUCTURE SHALL BE FILLED WITH CONCRETE, ABANDONED AND REPLACED WITH A SIPHON DISCHARGE STRUCTURE. SEE GENERAL GSSUM STACKING AND OPERATION PLAN, DWG. H1C11142.
7. FOR TYPICAL ROADWAY SECTIONS SEE DRAWING H1C11146.
8. SEE DRAWING H1C11145 FOR TYPICAL HEADWALL DETAILS AND SECTIONS.
9. BASE GRADE ELEVATIONS SHOWN FOR THE CELLS AND POND BOTTOMS REPRESENT TOP OF CLAY/SILT LAYER. ADDITIONAL SAND OR SOIL/MARKER BED MATERIAL WILL BE REQUIRED ABOVE THIS SURFACE. SEE CELL AND POND COMPOSITE LINER DETAILS, DRAWING H1C11144.
10. SEE DRAWING H1C11150 FOR ADDITIONAL EROSION CONTROL MEASURES INCLUDING TEMPORARY SEDIMENT BASIN FOR THIS AREA.
11. REFER TO SHEET H1C11148 FOR TYPICAL DOWNDRAIN DETAILS.
12. THE FACILITY SHALL COMPLY WITH APPLICABLE NPDES PERMITS, INCLUDING BUT NOT LIMITED TO APPLICABLE NPDES CONSTRUCTION STORMWATER DISCHARGE GENERAL PERMITS, NPDES STORMWATER DISCHARGE PERMITS, AND THE FACILITY NPDES WASTEWATER DISCHARGE PERMITS.

GEORGIA
DEPARTMENT OF NATURAL RESOURCES
ENVIRONMENTAL PROTECTION DIVISION
Approved
Solid Waste Management Program
Approved By: Keith Stevens
Digitally signed by Keith Stevens
Date: 2022.10.25 08:59:48 -04'00'

NO. 27185
R. BRANT LANE
9/27/22

GARY H. McWHORTER
9/27/22

NOTE:
FOR ADDITIONAL COLLECTION BASIN DETAILS, SEE SECTION THROUGH COLLECTION BASIN AT SLURRY LINE DISCHARGE, DWG. H1C11153

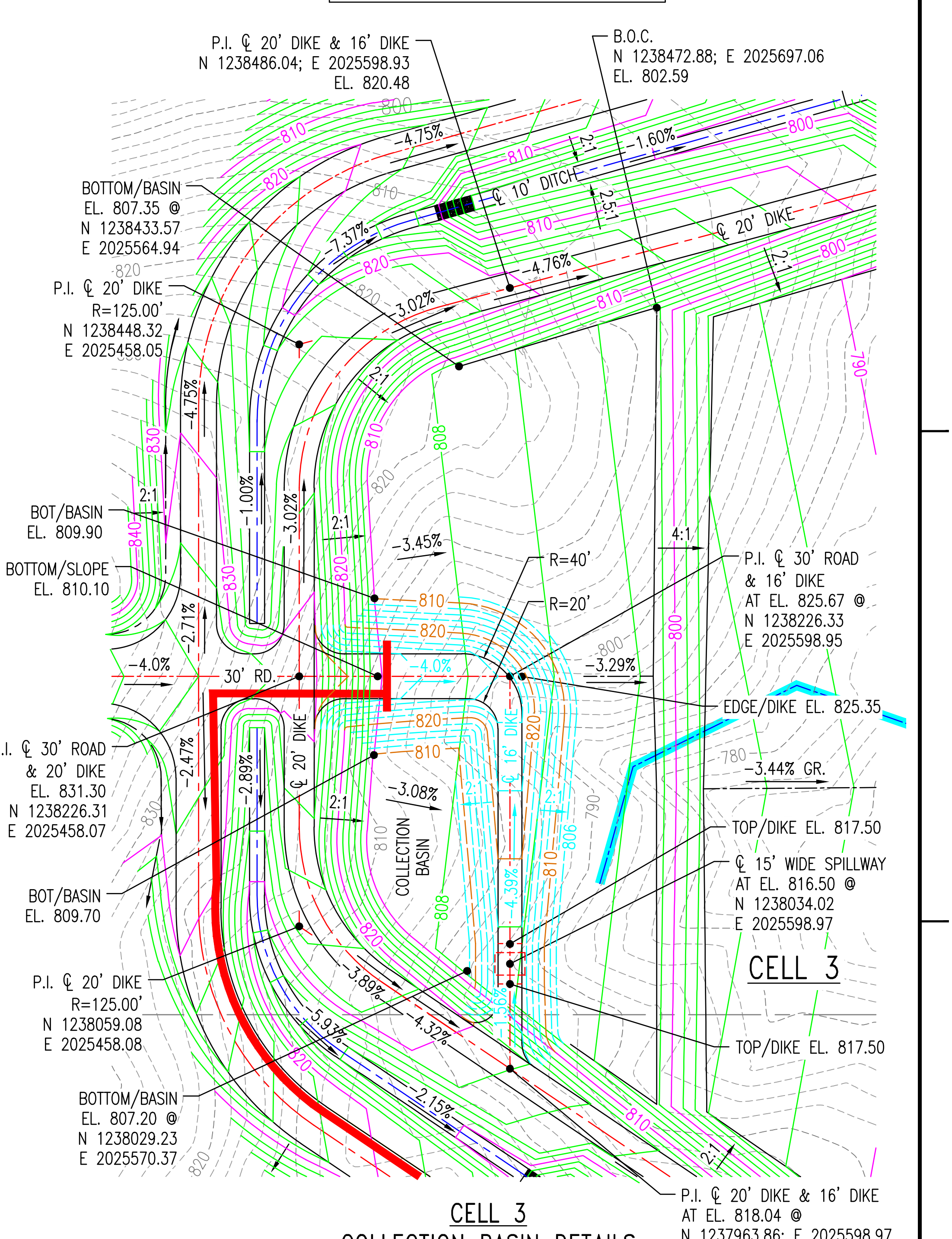
P.I. ℄ 20' DIKE & 16' DIKE N 1238486.04; E 2025598.93 EL. 820.48
B.O.C. N 1238472.88; E 2025697.06 EL. 802.59
BOTTOM/BASIN EL. 807.35 @ N 1238433.57 E 2025564.94
P.I. ℄ 20' DIKE R=125.00' N 1238448.32 E 2025458.05
BOT/BASIN EL. 809.90
BOTTOM/SLOPE EL. 810.10
P.I. ℄ 30' ROAD & 20' DIKE EL. 831.30 N 1238226.31 E 2025458.07
BOT/BASIN EL. 809.70
P.I. ℄ 20' DIKE R=125.00' N 1238059.08 E 2025458.08
BOTTOM/BASIN EL. 807.20 @ N 1238029.23 E 2025570.37
R=40'
R=20'
P.I. ℄ 30' ROAD & 16' DIKE AT EL. 825.67 @ N 1238226.33 E 2025598.95
EDGE/DIKE EL. 825.35
-3.44% GR.
TOP/DIKE EL. 817.50
℄ 15' WIDE SPILLWAY AT EL. 816.50 @ N 1238034.02 E 2025598.97
CELL 3
TOP/DIKE EL. 817.50
P.I. ℄ 20' DIKE & 16' DIKE AT EL. 818.04 @ N 1237963.86; E 2025598.97
℄ 10' DITCH
℄ 20' DIKE
℄ 20' DIKE
℄ 16' DIKE
30' RD.
COLLECTION BASIN

CELL 3
COLLECTION BASIN DETAILS
NO SCALE

LEGEND:

─··─℗─··─	PROPERTY LINE
▬·▬·▬	SITE BOUNDARY
▬ ▬ ▬	200' SITE BUFFER
— — —	500' WASTE LIMIT
—··· —	STREAMS
—·—·—	25' STREAM BUFFER
▨	WETLANDS
- - 700 - -	EXISTING GROUND CONTOURS
—700—	FINAL GRADE CONTOURS
—×—×—	EXISTING SECURITY FENCE
—o—o—	PROPOSED SECURITY FENCE
⌖ XXX.XX	SPOT ELEVATIONS
━━━	DOWNDRAIN
⌒⌒⌒	TREELINE

EROSION CONTROL LEGEND

Sd1	SILT FENCE (SEE DWG. H1C11149)
Di	DIVERSION (SEE DWG. H1C11149)
Lv	LEVEL SPREADER
Du	DUST CONTROL
Cd-s	STONE CHECK DAM (2"-10" STONE) ◆
Ds3	DISTURBED AREA STABILIZATION (PERMANENT VEGETATION)
Sd1-Bb	BRUSH BARRIER
Rd	ROCK FILTER DAM ◆
Ch-rp	CHANNEL STABILIZATION (RIPRAP)
Mb	EROSION CONTROL MATTING
St	STORM DRAIN OUTLET PROTECTION

REFERENCES:

H1C11120 TITLE SHEET AND DRAWING INDEX
H1C11143 MISCELLANEOUS DETAILS, SHEET 1
H1C11144 MISCELLANEOUS DETAILS, SHEET 2
H1C11148 MISCELLANEOUS SECTIONS AND DETAILS, SHEET 3
H1C11155 LEACHATE COLLECTION SYSTEM LAYOUT AND DETAILS

GRAPHIC SCALE
100 0 50 100 200 400
(IN FEET)
1 inch = 100 ft.

Southern Company Services, Inc.

Southern Company Generation
Engineering and Construction Services
FOR
Georgia Power Company

PLANT WANSLEY
COAL COMBUSTION BY-PRODUCT DISPOSAL FACILITY
CELL NO.3 SITE DEVELOPMENT
BASE GRADE PLAN

REVISION	DATE
REVISION 0	DATE 09-23-2022
CCR LF PERMIT APPLICATION [BY HHNT, INC.]	

BY	CHK'D	CIVIL APPR	ELECT APPR	I/C APPR	MECH APPR	DISC MGR	SCALE	DRAWING NUMBER	SHEET	CONT'D	REV
ANR	RBL		☒	☒	☒	☒	1"=100'	**H1C11133**	1	FINAL	0

Acad2008 ANSI F: 40x28

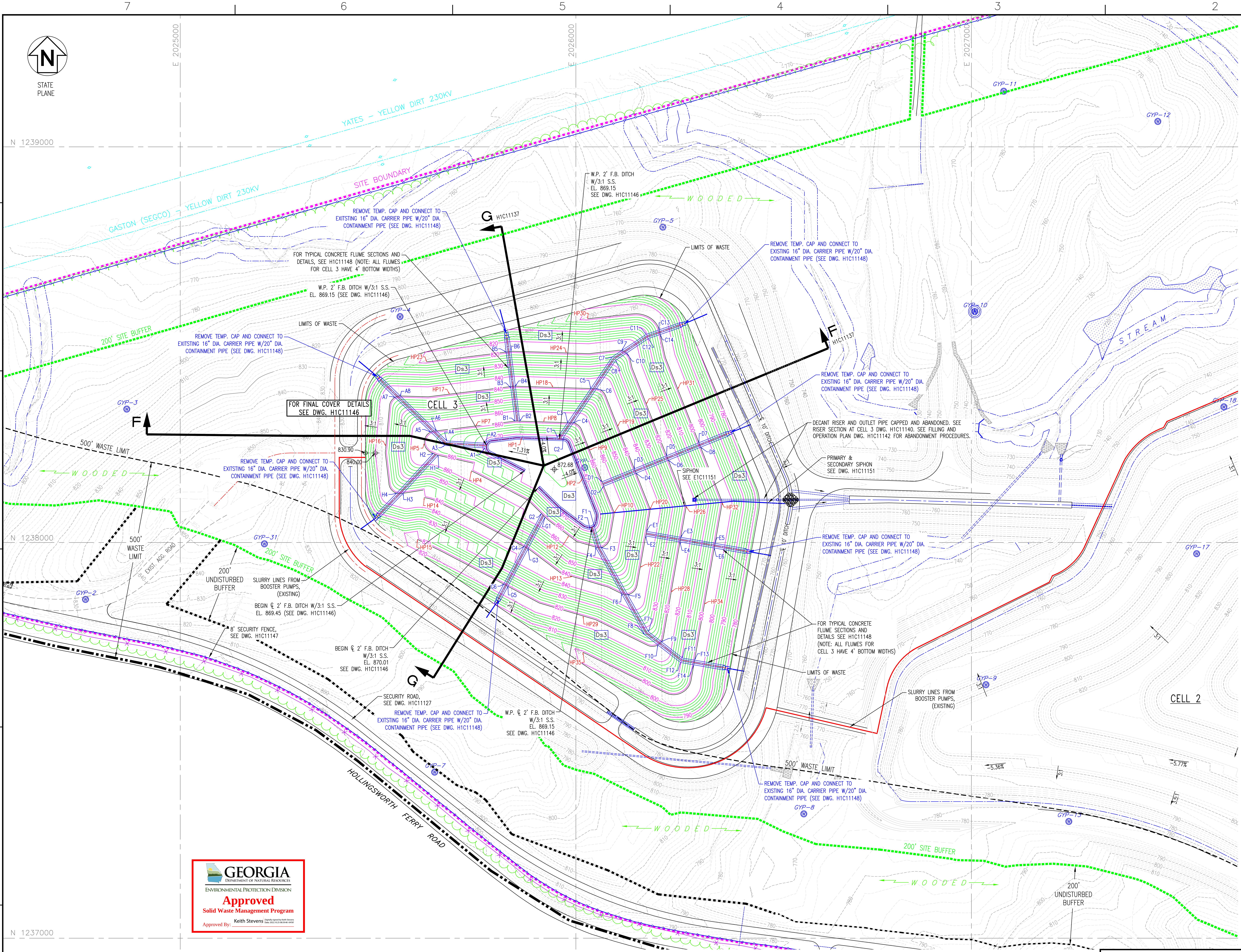
STATE PLANE
N
E 2025000
E 2026000
E 2027000
N 1239000
N 1238000
N 1237000
GASTON (SEGCO) - YELLOW DIRT 230KV
YATES - YELLOW DIRT 230KV
SITE BOUNDARY
200' SITE BUFFER
W O O D E D
500' WASTE LIMIT
500' WASTE LIMIT
200' UNDISTURBED BUFFER
EXIST. AGG. ROAD
REMOVE TEMP. CAP AND CONNECT TO EXITSTING 16" DIA. CARRIER PIPE W/20" DIA. CONTAINMENT PIPE (SEE DWG. H1C11148)
FOR TYPICAL CONCRETE FLUME SECTIONS AND DETAILS, SEE H1C11148 (NOTE: ALL FLUMES FOR CELL 3 HAVE 4' BOTTOM WIDTHS)
W.P. 2' F.B. DITCH W/3:1 S.S. EL. 869.15 (SEE DWG. H1C11146)
W.P. 2' F.B. DITCH W/3:1 S.S. EL. 869.15 SEE DWG. H1C11146
LIMITS OF WASTE
FOR FINAL COVER DETAILS SEE DWG. H1C11146
CELL 3
G H1C11137
F H1C11137
F
G
830.90
840.00
872.68
-1.31%
-4.0%
REMOVE TEMP. CAP AND CONNECT TO EXISTING 16" DIA. CARRIER PIPE W/20" DIA. CONTAINMENT PIPE (SEE DWG. H1C11148)
DECANT RISER AND OUTLET PIPE CAPPED AND ABANDONED. SEE RISER SECTION AT CELL 3 DWG. H1C11140. SEE FILLING AND OPERATION PLAN DWG. H1C11142 FOR ABANDONMENT PROCEDURES.
PRIMARY & SECONDARY SIPHON SEE DWG. H1C11151
SIPHON SEE E1C11151
℄ 10' DITCH
FOR TYPICAL CONCRETE FLUME SECTIONS AND DETAILS SEE H1C11148 (NOTE: ALL FLUMES FOR CELL 3 HAVE 4' BOTTOM WIDTHS)
SLURRY LINES FROM BOOSTER PUMPS, (EXISTING)
BEGIN ℄ 2' F.B. DITCH W/3:1 S.S. EL. 869.45 (SEE DWG. H1C11146)
BEGIN ℄ 2' F.B. DITCH W/3:1 S.S. EL. 870.01 SEE DWG. H1C11146
W.P. ℄ 2' F.B. DITCH W/3:1 S.S. EL. 869.15 SEE DWG. H1C11146
8' SECURITY FENCE, SEE DWG. H1C11147
SECURITY ROAD, SEE DWG. H1C11127
HOLLINGSWORTH FERRY ROAD
STREAM
CELL 2
-5.36%
-5.77%
GYP-2
GYP-3
GYP-4
GYP-5
GYP-7
GYP-8
GYP-9
GYP-10
GYP-11
GYP-12
GYP-13
GYP-17
GYP-18
GYP-31
Ds3
3:1
2:1
2.5:1

GEORGIA
DEPARTMENT OF NATURAL RESOURCES
ENVIRONMENTAL PROTECTION DIVISION
Approved
Solid Waste Management Program
Approved By: Keith Stevens

LEGEND:

—··—℗—··—	PROPERTY LINE
·······	SITE BOUNDARY
— — —	200' UNDISTURBED BUFFER
— — —	500' WASTE LIMIT
—·—·—	STREAMS
—·—·—	25' STREAM BUFFER
— — —	LIMITS OF CLEARING (SECURITY ROAD)
- - - -	LIMITS OF WASTE
▨	WETLANDS
--- 700 ---	EXISTING GROUND CONTOURS
— 700 —	FINAL GRADE CONTOURS
—×—×—	EXISTING SECURITY FENCE
—○—○—	PROPOSED SECURITY FENCE
———	DOWNDRAIN
⌒⌒⌒	TREELINE

EROSION CONTROL LEGEND

Ds3	DISTURBED AREA STABILIZATION (PERMANENT VEGETATION)

REFERENCES:

H1C11120	TITLE SHEET AND DRAWING INDEX
H1C11137	CELL NO. 3, SECTIONS THRU STACK
H1C11144	MISCELLANEOUS SECTIONS AND DETAILS, SHEET 2
H1C11146	MISCELLANEOUS SECTIONS AND DETAILS, SHEET 1
H1C11148	MISCELLANEOUS SECTIONS AND DETAILS, SHEET 3
H1C11151	SIPHON SECTIONS AND DETAILS
H1C11152	FLUME DATA SHEET

NOTES:

1. ALL EARTHEN STRUCTURES ARE ENGINEERED TO WITHSTAND A HORIZONTAL ACCELERATION OF 0.17g.
2. ANY IMPACT TO WETLANDS AND/OR ENCROACHMENT ON STREAM BUFFERS REQUIRES CORPS OF ENGINEERS (COE) APPROVAL. THIS APPROVAL SHALL BE OBTAINED PRIOR TO CONSTRUCTION. THE GEORGIA EPD SOLID WASTE MANAGEMENT PROGRAM AND THE 401 WATER QUALITY COORDINATOR (WATERSHED PROTECTION BRANCH) SHALL BE NOTIFIED WHEN GEORGIA POWER ENVIRONMENTAL AFFAIRS APPLIES FOR THE COE PERMIT. CONTACT GEORGIA POWER ENVIRONMENTAL AFFAIRS FOR INFORMATION AND ASSISTANCE
3. COORDINATE SYSTEM IS GEORGIA STATE PLANE NAD 83 (1994), WEST ZONE.
4. ALL EROSION CONTROL MEASURES SHALL BE IN CONFORMANCE WITH THE "MANUAL FOR EROSION AND SEDIMENT CONTROL OF GEORGIA, CURRENT EDITION.
5. SEE DRAWING H1C11149 FOR EROSION CONTROL NOTES.
6. SEE DRAWING H1C11124 FOR SURVEY CONTROL MONUMENT LOCATION.
7. FOR TYPICAL ROADWAY SECTIONS SEE DRAWING H1C11146.
8. THE FACILITY SHALL COMPLY WITH APPLICABLE NPDES PERMITS, INCLUDING BUT NOT LIMITED TO APPLICABLE NPDES CONSTRUCTION STORMWATER DISCHARGE GENERAL PERMITS, NPDES STORMWATER DISCHARGE PERMITS, AND THE FACILITY NPDES WASTEWATER DISCHARGE PERMITS.

R. BRANT LANE No. 27185 9/27/22

GARY H. McWHORTER 9/27/22

GRAPHIC SCALE
100 0 50 100 200 400
(IN FEET)
1 inch = 100 ft.

Southern Company Generation Engineering and Construction Services
FOR
Georgia Power Company

PLANT WANSLEY
COAL COMBUSTION BY-PRODUCT DISPOSAL FACILITY
CELL NO. 3
FINAL STACKING PLAN

REVISION	DATE	REVISION	DATE	REVISION	DATE	REVISION	DATE	REVISION	DATE	REVISION	DATE	REVISION 0	DATE 09-23-2022
												CCR LF PERMIT APPLICATION [BY HHNT, INC.]	

BY	CHK'D	CIVIL APPR	ELECT APPR	I/C APPR	MECH APPR	DISC MGR
ANR	RBL		☒	☒	☒	☒

SCALE	DRAWING NUMBER	SHEET	CONT'D	REV
1"=100'	**H1C11134**	1	FINAL	0

Acad2008 ANSI F: 40x28

target ZERO Every day, every job, safely.

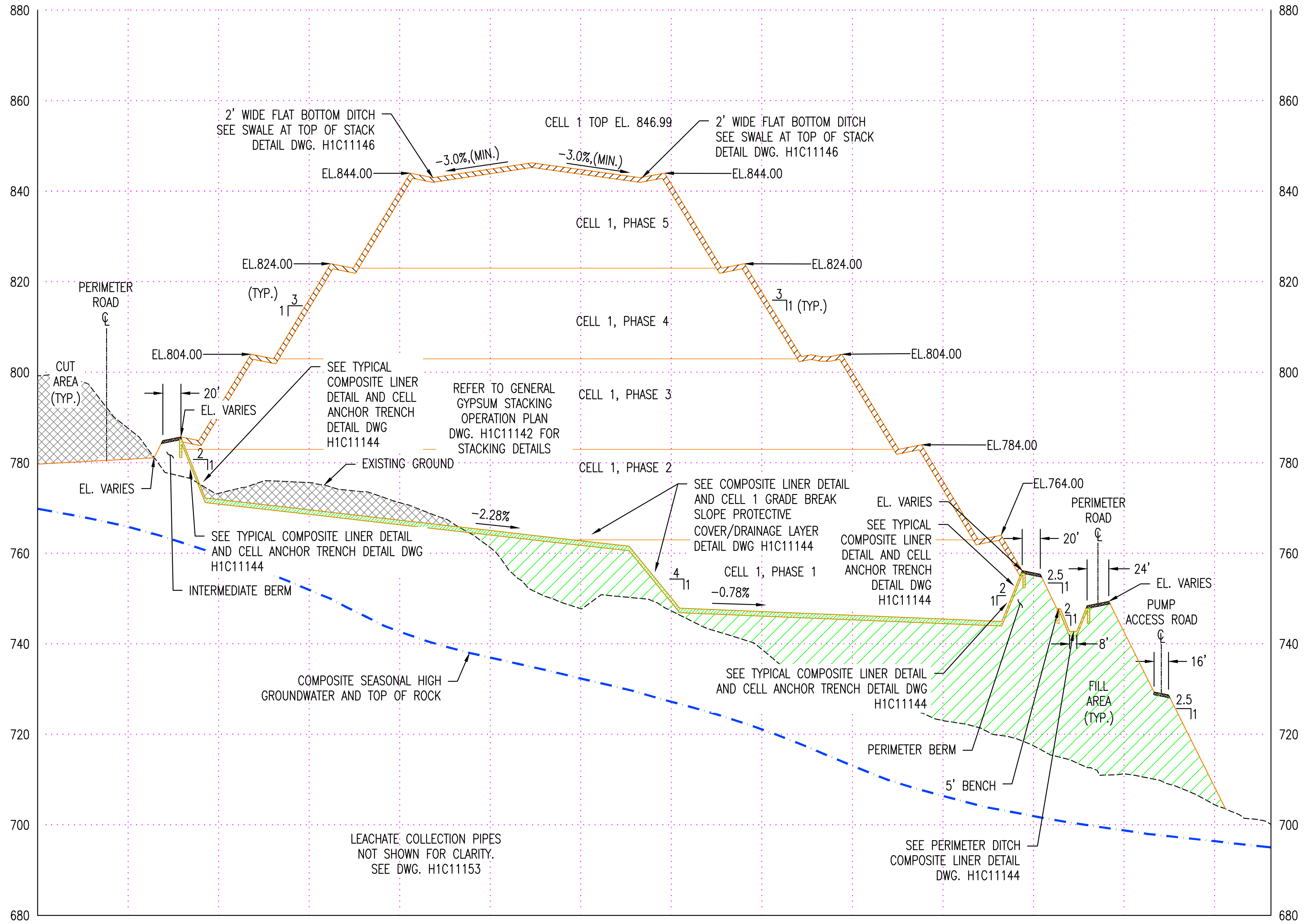
2' WIDE FLAT BOTTOM DITCH SEE SWALE AT TOP OF STACK DETAIL DWG. H1C11146
CELL 1 TOP EL. 846.99
-3.0% (MIN.)
EL.844.00
EL.824.00
EL.804.00
EL.784.00
EL.764.00
CELL 1, PHASE 5
CELL 1, PHASE 4
CELL 1, PHASE 3
CELL 1, PHASE 2
CELL 1, PHASE 1
PERIMETER ROAD
CUT AREA (TYP.)
SEE TYPICAL COMPOSITE LINER DETAIL AND CELL ANCHOR TRENCH DETAIL DWG H1C11144
REFER TO GENERAL GYPSUM STACKING OPERATION PLAN DWG. H1C11142 FOR STACKING DETAILS
EXISTING GROUND
INTERMEDIATE BERM
-2.28%
-0.78%
SEE COMPOSITE LINER DETAIL AND CELL 1 GRADE BREAK SLOPE PROTECTIVE COVER/DRAINAGE LAYER DETAIL DWG H1C11144
COMPOSITE SEASONAL HIGH GROUNDWATER AND TOP OF ROCK
PUMP ACCESS ROAD
FILL AREA (TYP.)
PERIMETER BERM
5' BENCH
SEE PERIMETER DITCH COMPOSITE LINER DETAIL DWG. H1C11144
LEACHATE COLLECTION PIPES NOT SHOWN FOR CLARITY. SEE DWG. H1C11153

SECTION A-A

SCALE H: 1"=100' V 1"=20'

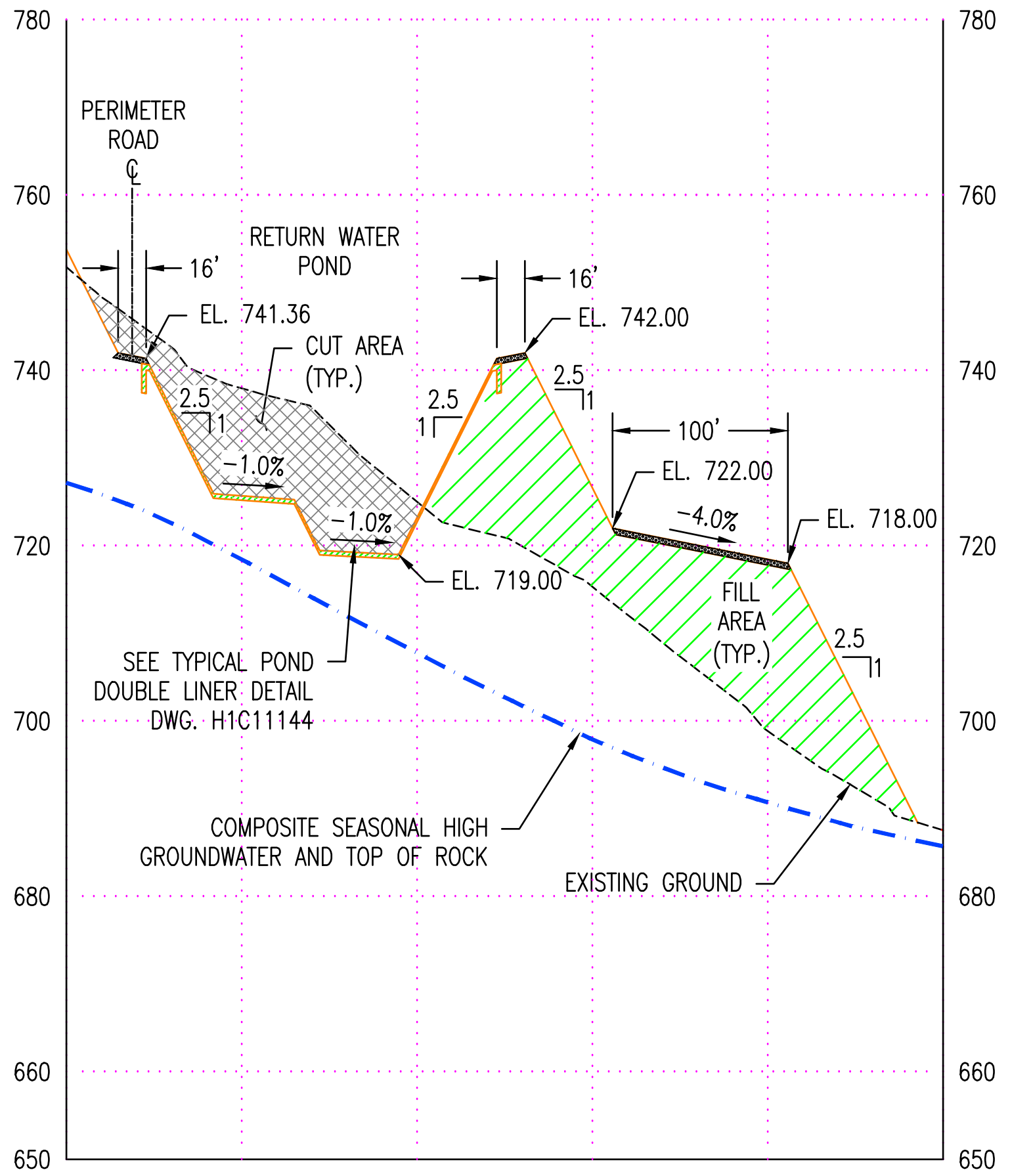
PERIMETER ROAD
RETURN WATER POND
EL. 741.36
EL. 742.00
CUT AREA (TYP.)
EL. 722.00
EL. 718.00
EL. 719.00
-1.0%
-4.0%
FILL AREA (TYP.)
SEE TYPICAL POND DOUBLE LINER DETAIL DWG. H1C11144
COMPOSITE SEASONAL HIGH GROUNDWATER AND TOP OF ROCK
EXISTING GROUND

CELL 1
SECTION C-C

SCALE H: 1"=100' V 1"=20'

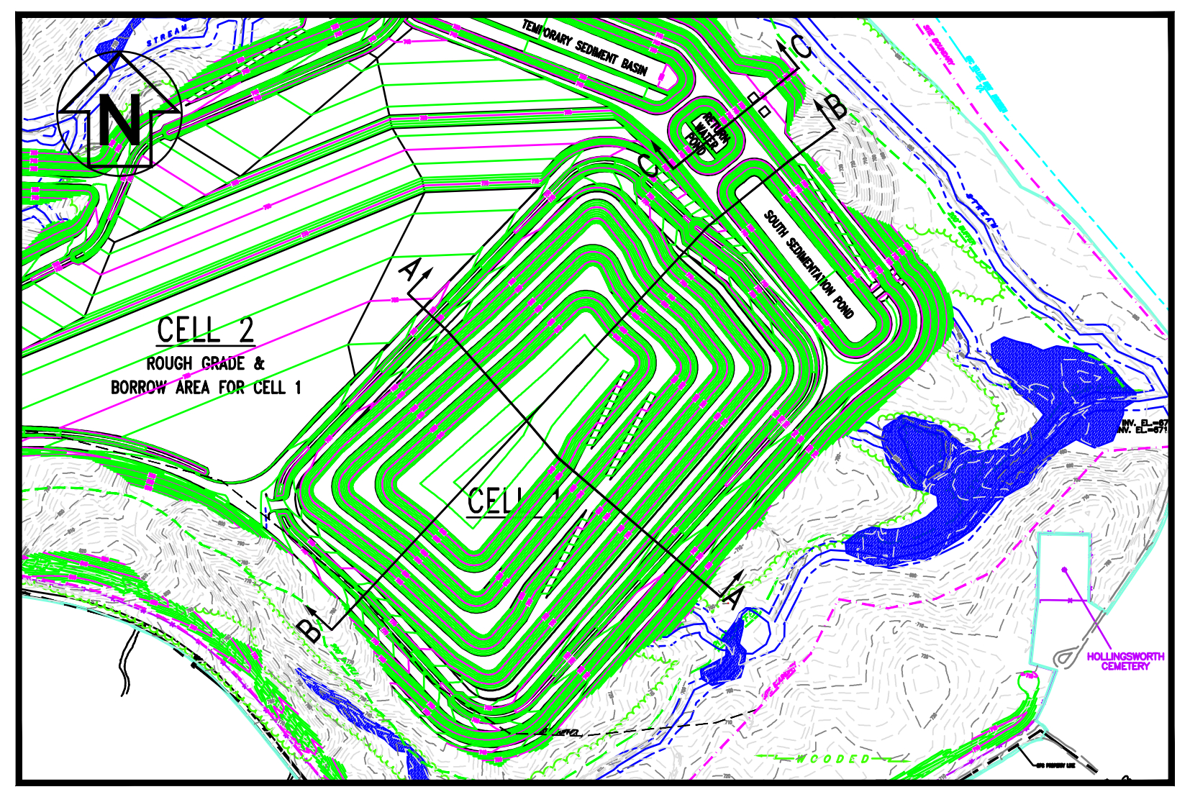
N
CELL 2
ROUGH GRADE & BORROW AREA FOR CELL 1
CELL 1
A
B
C

KEY PLAN

N.T.S.

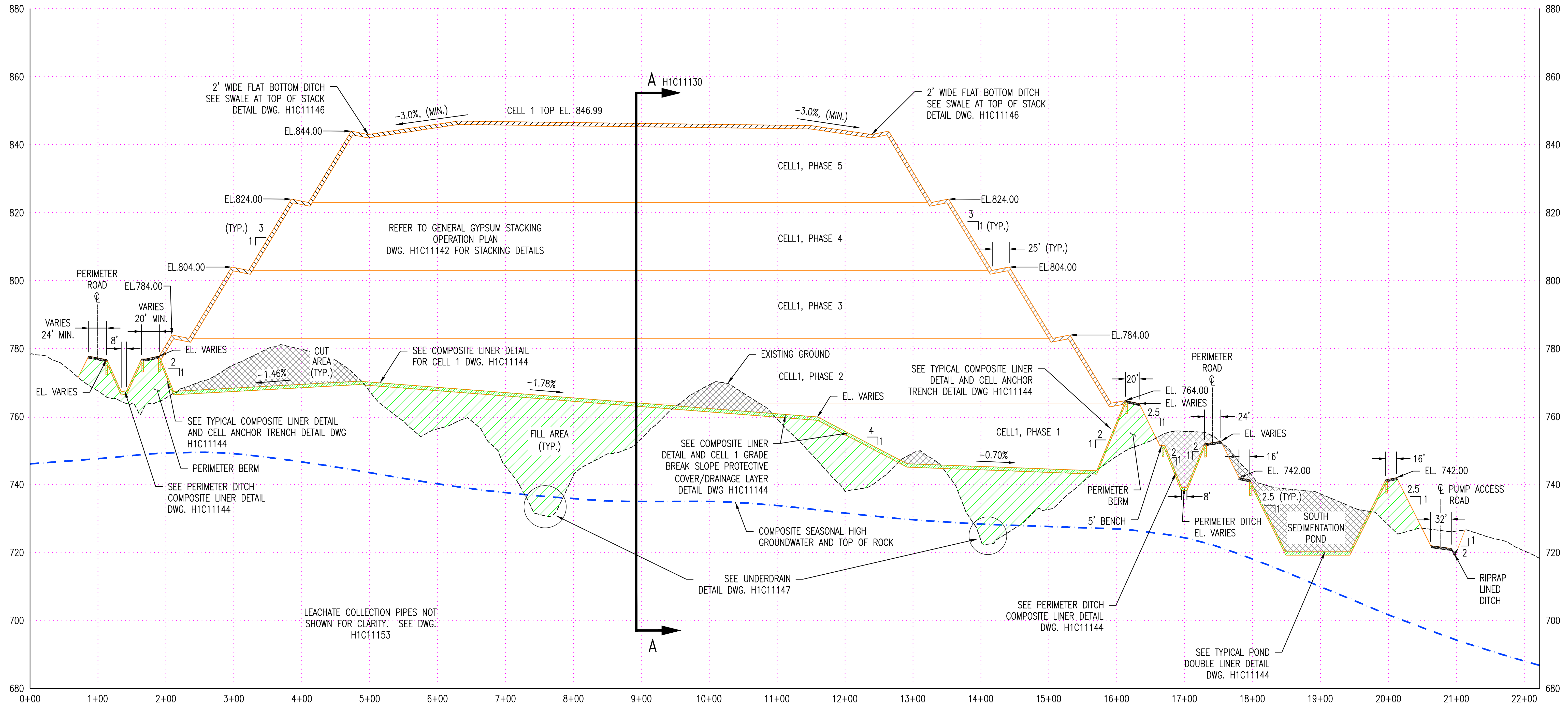
2' WIDE FLAT BOTTOM DITCH SEE SWALE AT TOP OF STACK DETAIL DWG. H1C11146
CELL 1 TOP EL. 846.99
-3.0% (MIN.)
A H1C11130
EL.844.00
EL.824.00
EL.804.00
EL.784.00
CELL1, PHASE 5
CELL1, PHASE 4
CELL1, PHASE 3
CELL1, PHASE 2
CELL1, PHASE 1
REFER TO GENERAL GYPSUM STACKING OPERATION PLAN DWG. H1C11142 FOR STACKING DETAILS
PERIMETER ROAD
CUT AREA (TYP.)
SEE COMPOSITE LINER DETAIL FOR CELL 1 DWG. H1C11144
EXISTING GROUND
-1.46%
-1.78%
-0.70%
FILL AREA (TYP.)
SEE COMPOSITE LINER DETAIL AND CELL 1 GRADE BREAK SLOPE PROTECTIVE COVER/DRAINAGE LAYER DETAIL DWG H1C11144
COMPOSITE SEASONAL HIGH GROUNDWATER AND TOP OF ROCK
SEE UNDERDRAIN DETAIL DWG. H1C11147
PERIMETER BERM
SEE PERIMETER DITCH COMPOSITE LINER DETAIL DWG. H1C11144
SOUTH SEDIMENTATION POND
SEE TYPICAL POND DOUBLE LINER DETAIL DWG. H1C11144
EL. 742.00
PUMP ACCESS ROAD
RIPRAP LINED DITCH
LEACHATE COLLECTION PIPES NOT SHOWN FOR CLARITY. SEE DWG. H1C11153

SECTION B-B

SCALE H: 1"=100' V 1"=20'

NOTES:

1. ALL EARTHEN STRUCTURES ARE ENGINEERED TO WITHSTAND A HORIZONTAL ACCELERATION OF 0.17g.
2. ANY IMPACT TO WETLANDS AND/OR ENCROACHMENT ON STREAM BUFFERS REQUIRES CORPS OF ENGINEERS (COE) APPROVAL. THIS APPROVAL SHALL BE OBTAINED PRIOR TO CONSTRUCTION. THE GEORGIA EPD SOLID WASTE MANAGEMENT PROGRAM AND THE 401 WATER QUALITY COORDINATOR (WATERSHED PROTECTION BRANCH) SHALL BE NOTIFIED WHEN GEORGIA POWER ENVIRONMENTAL AFFAIRS APPLIES FOR THE COE PERMIT. CONTACT GEORGIA POWER ENVIRONMENTAL AFFAIRS FOR INFORMATION AND ASSISTANCE.
3. COORDINATE SYSTEM IS GEORGIA STATE PLANE NAD 83 (1994) WEST ZONE.
4. ALL EROSION CONTROL MEASURES SHALL BE IN CONFORMANCE WITH THE "MANUAL FOR EROSION AND SEDIMENT CONTROL OF GEORGIA," CURRENT EDITION.
5. BASE GRADE ELEVATIONS SHOWN FOR THE CELLS AND PONDS REPRESENT TOP OF CLAY/SILT LAYER. ADDITIONAL SAND OR SOIL/MARKER BED MATERIAL WILL BE REQUIRED ABOVE THIS SURFACE. SEE CELL AND POND COMPOSITE LINER DETAILS, DRAWING H1C11144.
6. GRADES SHOWN REFLECT FINAL GRADES FOR CELL 1 ONLY. SEE H1C11136 FOR CELL 1 AND CELL 2 GRADES.

REFERENCES:

H1C11125 CELL NO. 1, SITE DEVELOPMENT BASE GRADE PLAN
H1C11130 CELL NO. 1, FINAL STACKING PLAN
H1C11136 CELL NO. 2. SECTIONS THRU STACK
H1C11144 CELL NO. 1 THROUGH CELL NO. 3, MISCELLANEOUS DETAILS
H1C11146 CELL NO. 1 THROUGH CELL NO. 3, MISCELLANEOUS SECTIONS AND DETAILS, SHEET 1

GEORGIA
DEPARTMENT OF NATURAL RESOURCES
ENVIRONMENTAL PROTECTION DIVISION
Approved
Solid Waste Management Program
Approved By: Keith Stevens Digitally signed by Keith Stevens Date: 2022.10.25 08:59:48 -04'00'

NO. 27185 R. BRANT LANE 9/27/22

9/27/22

Southern Company Services, Inc.

Southern Company Generation
Engineering and Construction Services
FOR

Georgia Power Company

PLANT WANSLEY
COAL COMBUSTION BY-PRODUCT DISPOSAL FACILITY
CELL NO. 1
SECTIONS THRU STACK

REVISION	DATE	DESCRIPTION	BY	CHK'D	CIVIL APPR	ELECT APPR	I/C APPR	MECH APPR	DISC MGR
3	3-20-12	GENERAL REVISION MWO: ECS774	JWM/DSM	MHL	RCB	☒	☒	☒	☒
0	09-23-2022	CCR LF PERMIT APPLICATION [BY HHNT, INC.]	ANR	RBL		☒	☒	☒	☒

SCALE	DRAWING NUMBER	SHEET	CONT'D	REV
AS NOTED	**H1C11135**	1	FINAL	0

Acad2008 ANSI F: 40x28

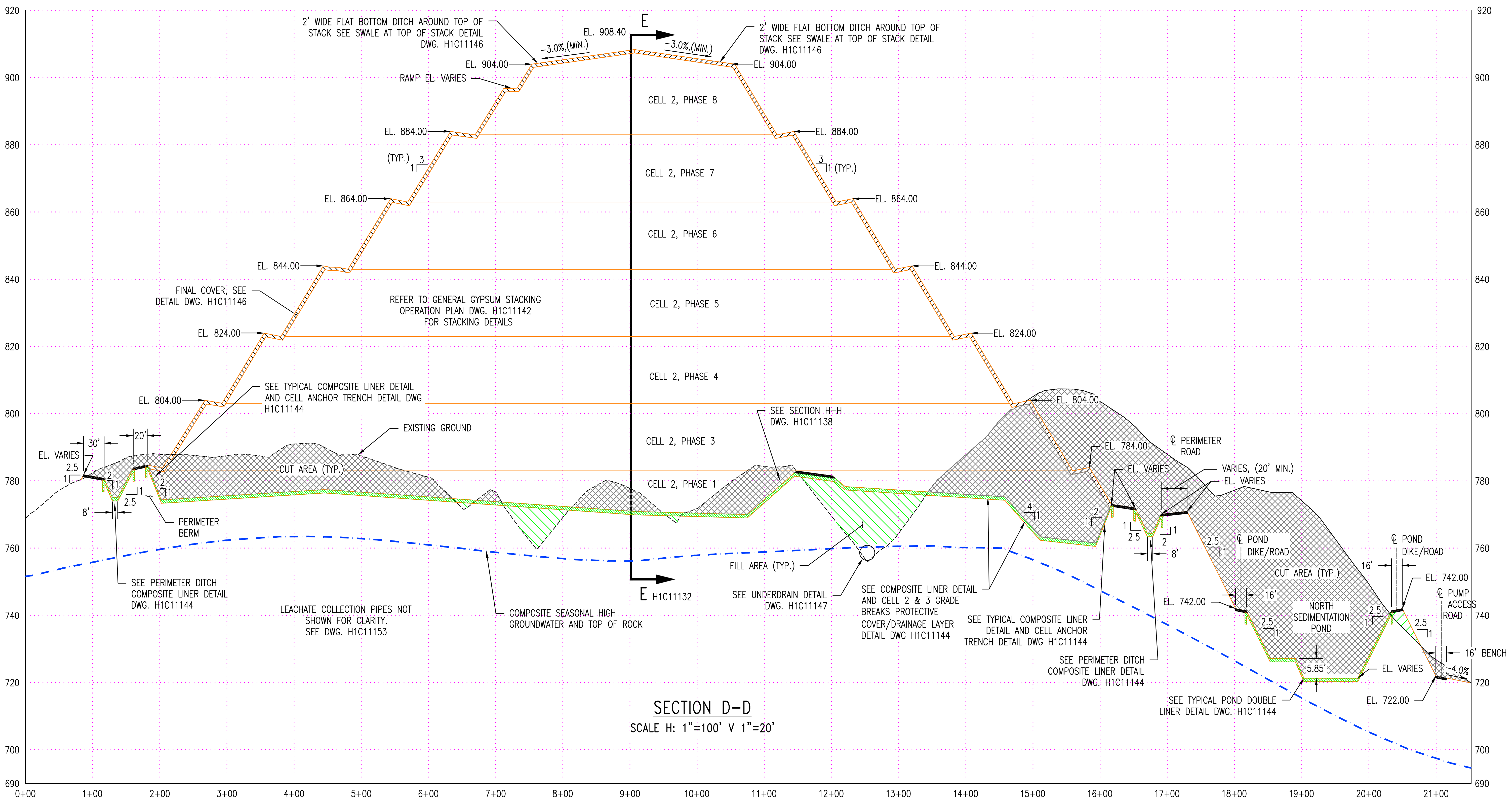
2' WIDE FLAT BOTTOM DITCH AROUND TOP OF STACK SEE SWALE AT TOP OF STACK DETAIL DWG. H1C11146
EL. 908.40
-3.0%(MIN.)
EL. 904.00
RAMP EL. VARIES
CELL 2, PHASE 8
EL. 884.00
(TYP.) 3 1
CELL 2, PHASE 7
EL. 864.00
CELL 2, PHASE 6
EL. 844.00
FINAL COVER, SEE DETAIL DWG. H1C11146
REFER TO GENERAL GYPSUM STACKING OPERATION PLAN DWG. H1C11142 FOR STACKING DETAILS
CELL 2, PHASE 5
EL. 824.00
SEE TYPICAL COMPOSITE LINER DETAIL AND CELL ANCHOR TRENCH DETAIL DWG H1C11144
CELL 2, PHASE 4
EL. 804.00
SEE SECTION H-H DWG. H1C11138
EXISTING GROUND
CELL 2, PHASE 3
CUT AREA (TYP.)
CELL 2, PHASE 1
EL. VARIES
30'
20'
PERIMETER BERM
8'
SEE PERIMETER DITCH COMPOSITE LINER DETAIL DWG. H1C11144
LEACHATE COLLECTION PIPES NOT SHOWN FOR CLARITY. SEE DWG. H1C11153
COMPOSITE SEASONAL HIGH GROUNDWATER AND TOP OF ROCK
FILL AREA (TYP.)
E H1C11132
SEE UNDERDRAIN DETAIL DWG. H1C11147
SEE COMPOSITE LINER DETAIL AND CELL 2 & 3 GRADE BREAKS PROTECTIVE COVER/DRAINAGE LAYER DETAIL DWG H1C11144
SEE TYPICAL COMPOSITE LINER DETAIL AND CELL ANCHOR TRENCH DETAIL DWG H1C11144
SEE PERIMETER DITCH COMPOSITE LINER DETAIL DWG. H1C11144
℄ PERIMETER ROAD
EL. 784.00
VARIES, (20' MIN.)
EL. VARIES
℄ POND DIKE/ROAD
NORTH SEDIMENTATION POND
EL. 742.00
16'
5.85'
EL. 722.00
SEE TYPICAL POND DOUBLE LINER DETAIL DWG. H1C11144
℄ PUMP ACCESS ROAD
16' BENCH
-4.0%
0+00 1+00 2+00 3+00 4+00 5+00 6+00 7+00 8+00 9+00 10+00 11+00 12+00 13+00 14+00 15+00 16+00 17+00 18+00 19+00 20+00 21+00
690 700 720 740 760 780 800 820 840 860 880 900 920

SECTION D-D

SCALE H: 1"=100' V 1"=20'

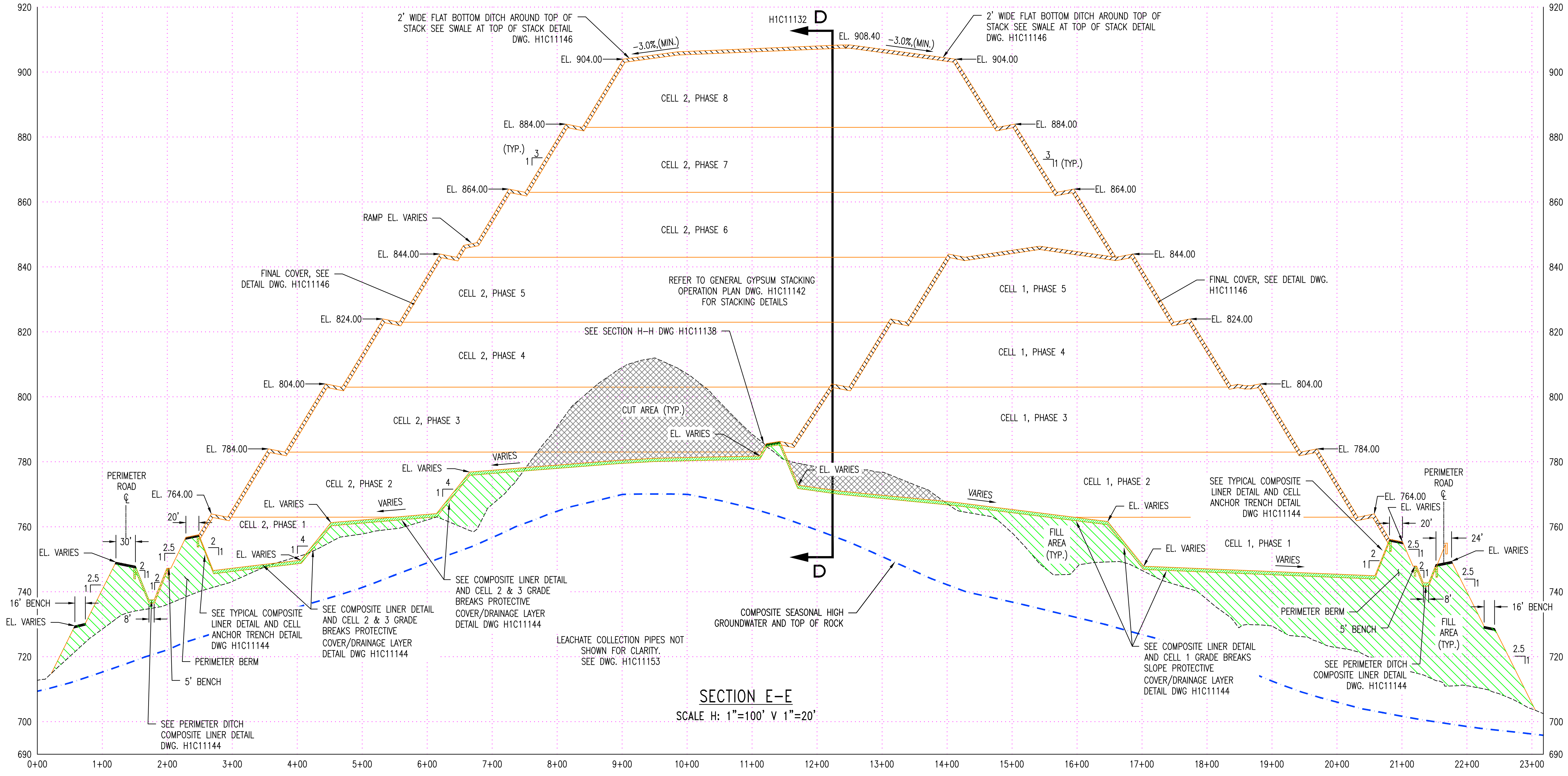
H1C11132 D
2' WIDE FLAT BOTTOM DITCH AROUND TOP OF STACK SEE SWALE AT TOP OF STACK DETAIL DWG. H1C11146
EL. 908.40
-3.0%(MIN.)
EL. 904.00
CELL 2, PHASE 8
EL. 884.00
(TYP.) 3 1
CELL 2, PHASE 7
EL. 864.00
RAMP EL. VARIES
CELL 2, PHASE 6
EL. 844.00
FINAL COVER, SEE DETAIL DWG. H1C11146
REFER TO GENERAL GYPSUM STACKING OPERATION PLAN DWG. H1C11142 FOR STACKING DETAILS
CELL 2, PHASE 5
CELL 1, PHASE 5
EL. 824.00
SEE SECTION H-H DWG H1C11138
CELL 2, PHASE 4
CELL 1, PHASE 4
EL. 804.00
CUT AREA (TYP.)
CELL 2, PHASE 3
CELL 1, PHASE 3
EL. 784.00
EL. VARIES
VARIES
CELL 2, PHASE 2
CELL 1, PHASE 2
PERIMETER ROAD ℄
EL. 764.00
CELL 2, PHASE 1
CELL 1, PHASE 1
FILL AREA (TYP.)
16' BENCH
SEE TYPICAL COMPOSITE LINER DETAIL AND CELL ANCHOR TRENCH DETAIL DWG H1C11144
PERIMETER BERM
5' BENCH
SEE PERIMETER DITCH COMPOSITE LINER DETAIL DWG. H1C11144
SEE COMPOSITE LINER DETAIL AND CELL 2 & 3 GRADE BREAKS PROTECTIVE COVER/DRAINAGE LAYER DETAIL DWG H1C11144
LEACHATE COLLECTION PIPES NOT SHOWN FOR CLARITY. SEE DWG. H1C11153
COMPOSITE SEASONAL HIGH GROUNDWATER AND TOP OF ROCK
SEE COMPOSITE LINER DETAIL AND CELL 1 GRADE BREAKS SLOPE PROTECTIVE COVER/DRAINAGE LAYER DETAIL DWG H1C11144
24'
0+00 1+00 2+00 3+00 4+00 5+00 6+00 7+00 8+00 9+00 10+00 11+00 12+00 13+00 14+00 15+00 16+00 17+00 18+00 19+00 20+00 21+00 22+00 23+00
690 700 720 740 760 780 800 820 840 860 880 900 920

SECTION E-E

SCALE H: 1"=100' V 1"=20'

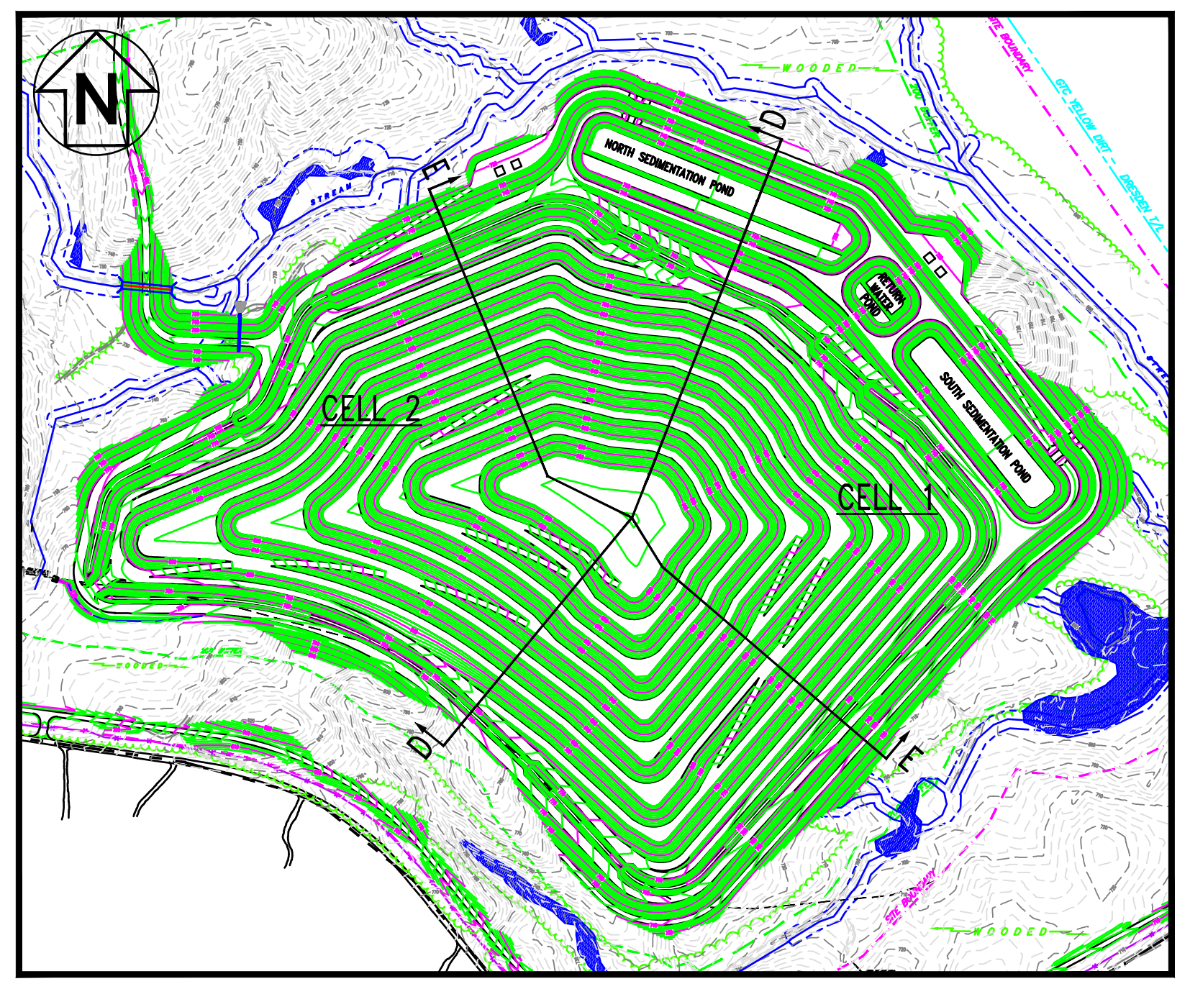
N
CELL 2
CELL 1
D
E

KEY PLAN

N.T.S.

NOTES:

1. ALL EARTHEN STRUCTURES ARE ENGINEERED TO WITHSTAND A HORIZONTAL ACCELERATION OF 0.17g.
2. ANY IMPACT TO WETLANDS AND/OR ENCROACHMENT ON STREAM BUFFERS REQUIRES CORPS OF ENGINEERS (COE) APPROVAL. THIS APPROVAL SHALL BE OBTAINED PRIOR TO CONSTRUCTION. THE GEORGIA EPD SOLID WASTE MANAGEMENT PROGRAM AND THE 401 WATER QUALITY COORDINATOR (WATERSHED PROTECTION BRANCH) SHALL BE NOTIFIED WHEN GEORGIA POWER ENVIRONMENTAL AFFAIRS APPLIES FOR THE COE PERMIT. CONTACT GEORGIA POWER ENVIRONMENTAL AFFAIRS FOR INFORMATION AND ASSISTANCE.
3. COORDINATE SYSTEM IS GEORGIA STATE PLANE NAD 83 (1994) WEST ZONE.
4. ALL EROSION CONTROL MEASURES SHALL BE IN CONFORMANCE WITH THE "MANUAL FOR EROSION AND SEDIMENT CONTROL OF GEORGIA," CURRENT EDITION.
5. BASE GRADE ELEVATIONS SHOWN FOR THE CELLS AND PONDS REPRESENT TOP OF CLAY/SILT LAYER. ADDITIONAL SAND OR SOIL/MARKER BED MATERIAL WILL BE REQUIRED ABOVE THIS SURFACE. SEE CELL AND POND COMPOSITE LINER DETAILS, DRAWING H1C11144.

REFERENCES:

H1C11132 CELL NO. 1 & 2 COMBINED, FINAL STACKING PLAN
H1C11138 CELL NO. 1 THROUGH CELL NO. 3, MISCELLANEOUS SECTIONS, SHEET 1
H1C11142 GENERAL GYPSUM STACKING, OPERATION PLAN
H1C11144 CELL NO. 1 THROUGH CELL NO. 3, MISCELLANEOUS DETAILS, SHEET 2
H1C11146 CELL NO. 1 THROUGH CELL NO. 3, MISCELLANEOUS SECTIONS AND DETAILS, SHEET 1
H1C11147 CELL NO. 1 THROUGH CELL NO. 3, MISCELLANEOUS SECTIONS AND DETAILS, SHEET 2
H1C11153 CELL NO. 1, LEACHATE COLLECTION SYSTEM LAYOUT

GEORGIA
DEPARTMENT OF NATURAL RESOURCES
ENVIRONMENTAL PROTECTION DIVISION
Approved
Solid Waste Management Program
Approved By: Keith Stevens Digitally signed by Keith Stevens Date: 2022.10.25 08:59:48 -04'00'

NO. 27185
R. BRANT LANE
9/27/22

GARY H. McWHORTER
9/29/22

REVISION 0 DATE 09-23-2022
CCR LF PERMIT APPLICATION [BY HHNT, INC.]

BY	CHK'D	CIVIL APPR	ELECT APPR	I/C APPR	MECH APPR	DISC MGR
ANR	RBL		☒	☒	☒	☒

Southern Company Generation
Engineering and Construction Services
FOR

Georgia Power Company

PLANT WANSLEY
COAL COMBUSTION BY-PRODUCT DISPOSAL FACILITY
CELLS NO. 1 AND NO. 2
SECTIONS THRU STACK

SCALE	DRAWING NUMBER	SHEET	CONT'D	REV
AS NOTED	**H1C11136**	1	FINAL	0

Acad2008 ANSI F: 40x28

target ZERO Every day, every job, safely.

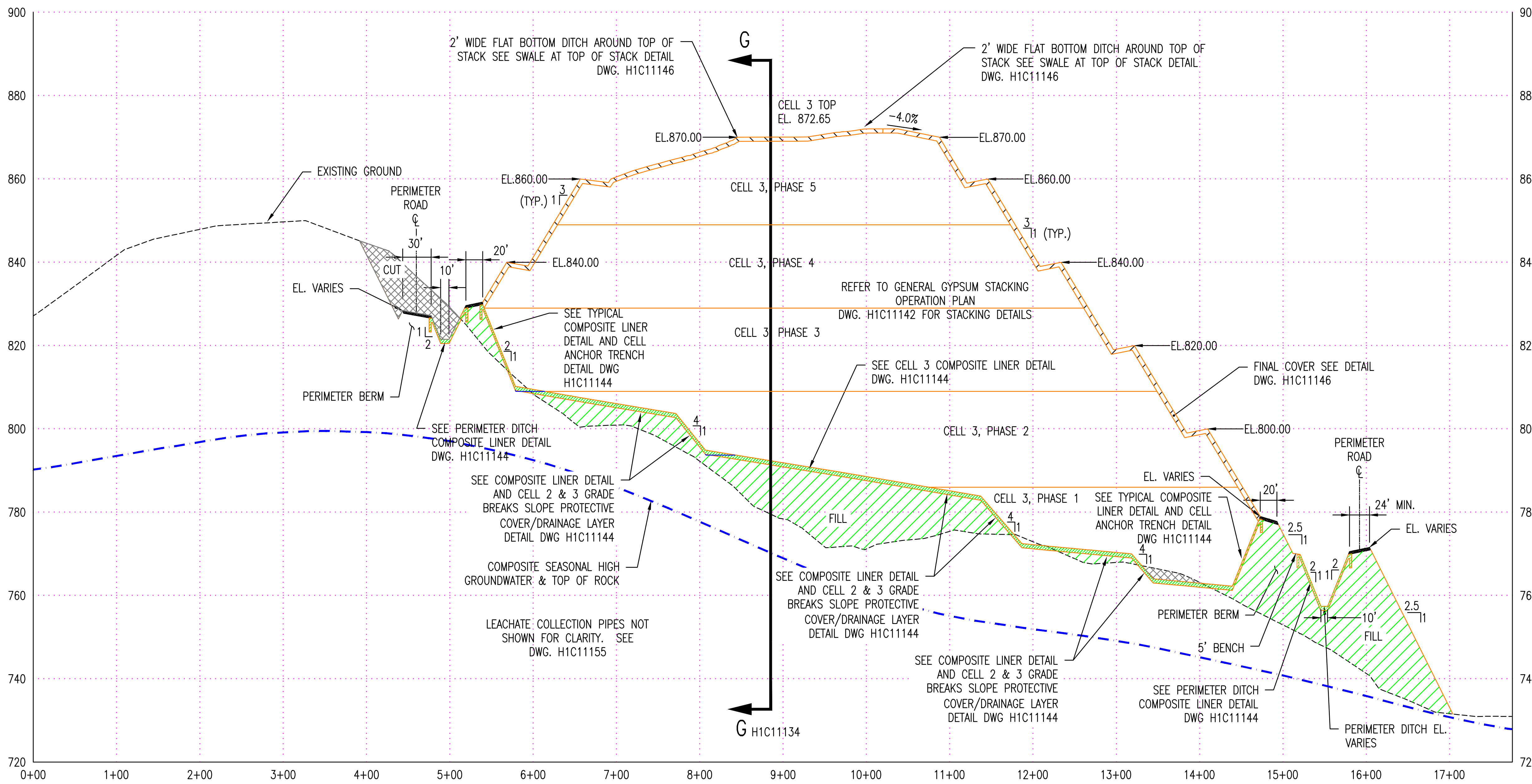
2' WIDE FLAT BOTTOM DITCH AROUND TOP OF STACK SEE SWALE AT TOP OF STACK DETAIL DWG. H1C11146
G
CELL 3 TOP EL. 872.65
-4.0%
EL.870.00
EL.860.00
(TYP.) 1 3
CELL 3, PHASE 5
CELL 3, PHASE 4
CELL 3 PHASE 3
CELL 3, PHASE 2
CELL 3, PHASE 1
EXISTING GROUND
PERIMETER ROAD ℄
30'
10'
20'
CUT
EL. VARIES
EL.840.00
EL.820.00
EL.800.00
3 1 (TYP.)
SEE TYPICAL COMPOSITE LINER DETAIL AND CELL ANCHOR TRENCH DETAIL DWG H1C11144
REFER TO GENERAL GYPSUM STACKING OPERATION PLAN DWG. H1C11142 FOR STACKING DETAILS
SEE CELL 3 COMPOSITE LINER DETAIL DWG. H1C11144
FINAL COVER SEE DETAIL DWG. H1C11146
PERIMETER BERM
SEE PERIMETER DITCH COMPOSITE LINER DETAIL DWG. H1C11144
SEE COMPOSITE LINER DETAIL AND CELL 2 & 3 GRADE BREAKS SLOPE PROTECTIVE COVER/DRAINAGE LAYER DETAIL DWG H1C11144
COMPOSITE SEASONAL HIGH GROUNDWATER & TOP OF ROCK
LEACHATE COLLECTION PIPES NOT SHOWN FOR CLARITY. SEE DWG. H1C11155
FILL
4 1
2 1
2.5 1
SEE TYPICAL COMPOSITE LINER DETAIL AND CELL ANCHOR TRENCH DETAIL DWG H1C11144
PERIMETER ROAD ℄
24' MIN.
EL. VARIES
5' BENCH
10'
SEE PERIMETER DITCH COMPOSITE LINER DETAIL DWG H1C11144
PERIMETER DITCH EL. VARIES
G H1C11134
900
880
860
840
820
800
780
760
740
720
0+00
1+00
2+00
3+00
4+00
5+00
6+00
7+00
8+00
9+00
10+00
11+00
12+00
13+00
14+00
15+00
16+00
17+00

CELL 3
SECTION F-F
SCALE H: 1"=100' V 1"=20'

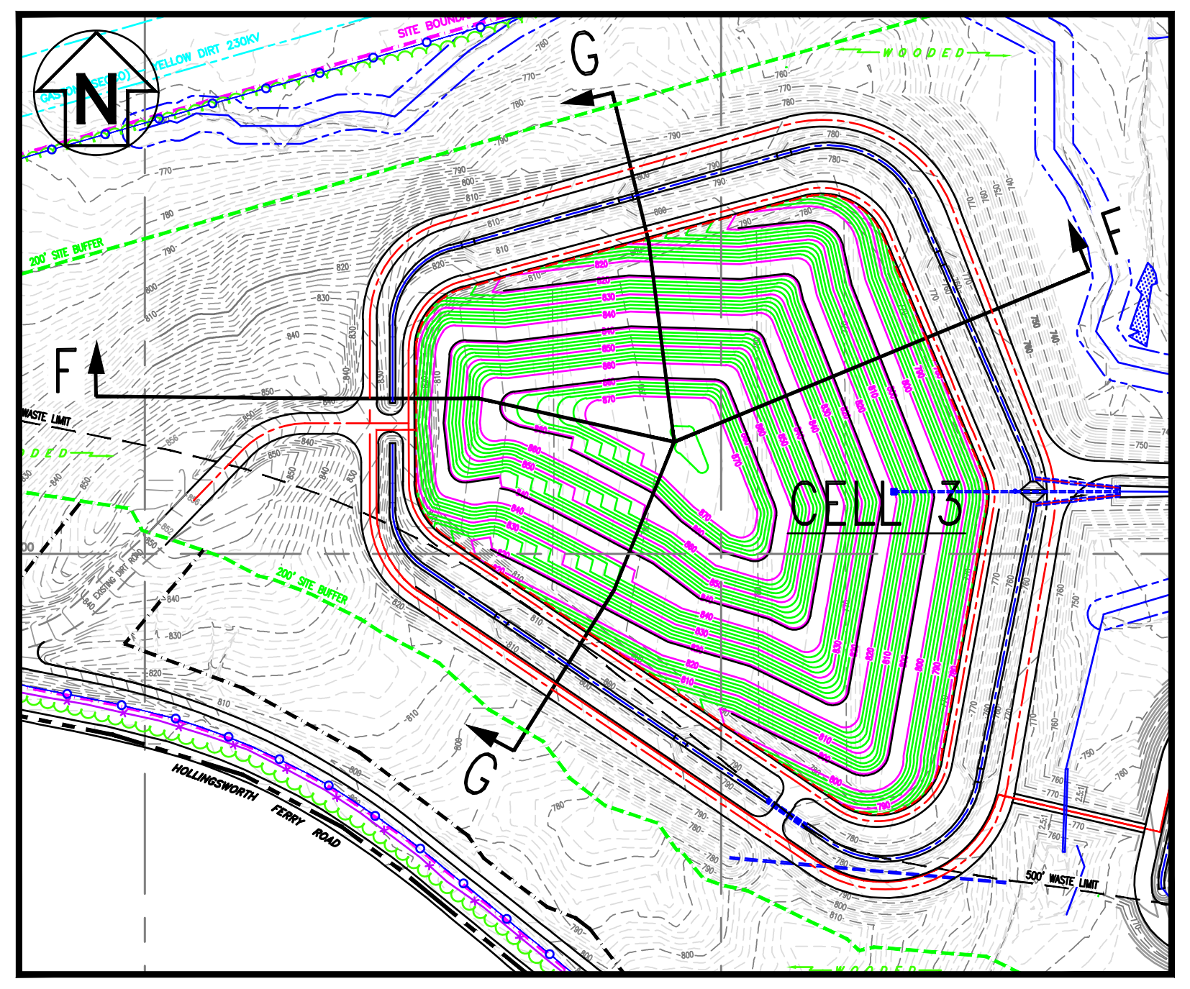
N
G
F
CELL 3
200' SITE BUFFER
WASTE LIMIT
500' WASTE LIMIT
EXISTING DIRT ROAD
HOLLINGSWORTH FERRY ROAD
SITE BOUNDARY
YELLOW DIRT 230KV
WOODED

KEY PLAN
N.T.S.

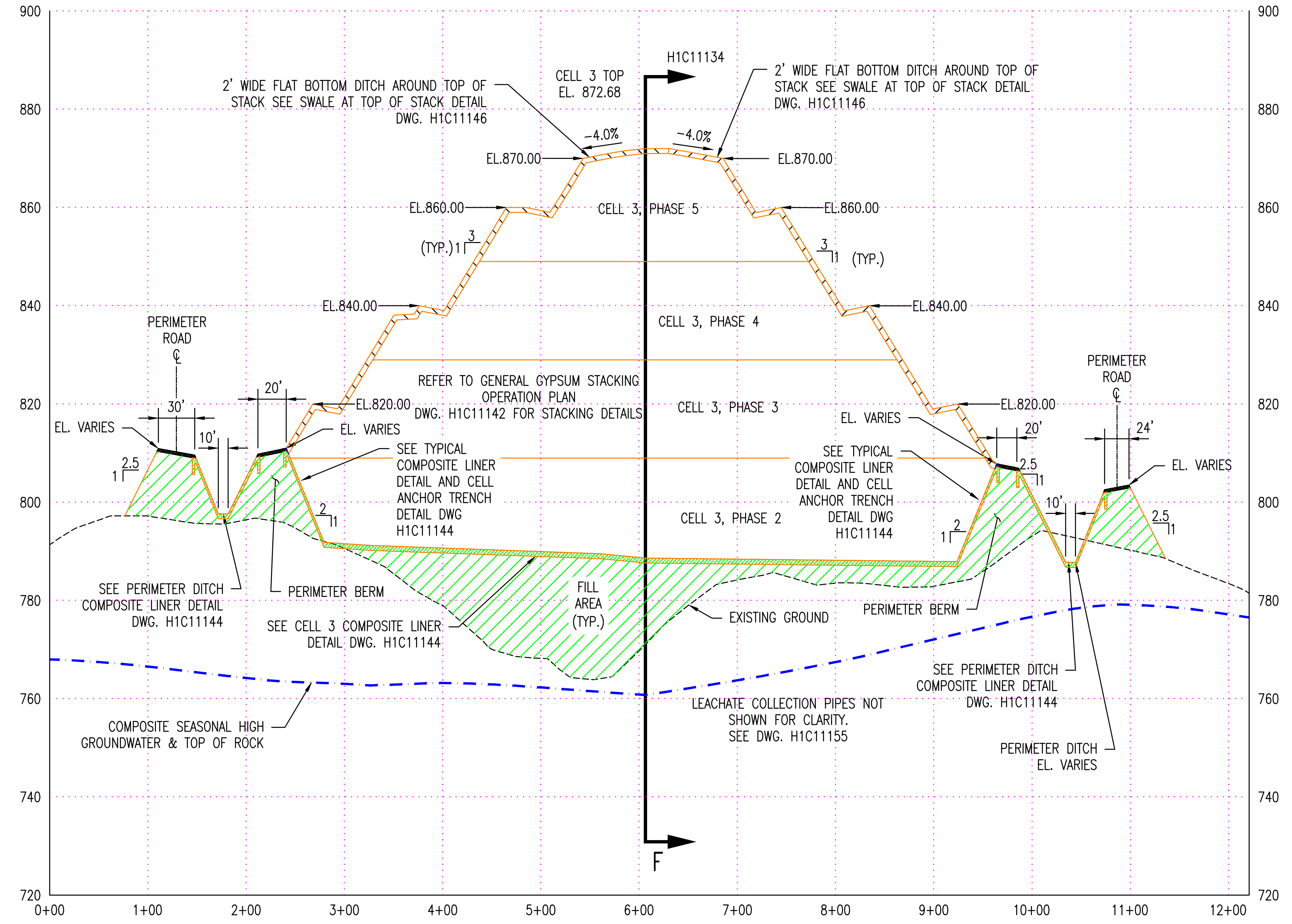
H1C11134
CELL 3 TOP EL. 872.68
2' WIDE FLAT BOTTOM DITCH AROUND TOP OF STACK SEE SWALE AT TOP OF STACK DETAIL DWG. H1C11146
-4.0%
-4.0%
EL.870.00
EL.860.00
EL.840.00
EL.820.00
(TYP.) 1 3
3 1 (TYP.)
CELL 3, PHASE 5
CELL 3, PHASE 4
CELL 3, PHASE 3
CELL 3, PHASE 2
REFER TO GENERAL GYPSUM STACKING OPERATION PLAN DWG. H1C11142 FOR STACKING DETAILS
PERIMETER ROAD ℄
30'
10'
20'
24'
EL. VARIES
2.5 1
2 1
SEE TYPICAL COMPOSITE LINER DETAIL AND CELL ANCHOR TRENCH DETAIL DWG H1C11144
SEE PERIMETER DITCH COMPOSITE LINER DETAIL DWG. H1C11144
PERIMETER BERM
SEE CELL 3 COMPOSITE LINER DETAIL DWG. H1C11144
FILL AREA (TYP.)
EXISTING GROUND
COMPOSITE SEASONAL HIGH GROUNDWATER & TOP OF ROCK
LEACHATE COLLECTION PIPES NOT SHOWN FOR CLARITY. SEE DWG. H1C11155
PERIMETER DITCH EL. VARIES
F
900
880
860
840
820
800
780
760
740
720
0+00
1+00
2+00
3+00
4+00
5+00
6+00
7+00
8+00
9+00
10+00
11+00
12+00

CELL 3
SECTION G-G
SCALE H: 1"=100' V 1"=20'

NOTES:

1. ALL EARTHEN STRUCTURES ARE ENGINEERED TO WITHSTAND A HORIZONTAL ACCELERATION OF 0.17g.
2. ANY IMPACT TO WETLANDS AND/OR ENCROACHMENT ON STREAM BUFFERS REQUIRES CORPS OF ENGINEERS (COE) APPROVAL. THIS APPROVAL SHALL BE OBTAINED PRIOR TO CONSTRUCTION. THE GEORGIA EPD SOLID WASTE MANAGEMENT PROGRAM AND THE 401 WATER QUALITY COORDINATOR (WATERSHED PROTECTION BRANCH) SHALL BE NOTIFIED WHEN GEORGIA POWER ENVIRONMENTAL AFFAIRS APPLIES FOR THE COE PERMIT. CONTACT GEORGIA POWER ENVIRONMENTAL AFFAIRS FOR INFORMATION AND ASSISTANCE.
3. COORDINATE SYSTEM IS GEORGIA STATE PLANE NAD 83 (1994) WEST ZONE.
4. ALL EROSION CONTROL MEASURES SHALL BE IN CONFORMANCE WITH THE "MANUAL FOR EROSION AND SEDIMENT CONTROL OF GEORGIA," CURRENT EDITION.
5. BASE GRADE ELEVATIONS SHOWN FOR THE CELL REPRESENT TOP OF CLAY/SILT LAYER. ADDITIONAL SAND WILL BE REQUIRED ABOVE THIS SURFACE. SEE CELL COMPOSITE LINER DETAILS, DRAWING H1C11144.

REFERENCES:

H1C11134 CELL NO. 3 FINAL STACKING PLAN
H1C11142 GENERAL GYPSUM STACKING, OPERATION PLAN
H1C11144 CELL NO. 1 THROUGH CELL NO. 3, MISCELLANEOUS DETAILS, SHEET 2
H1C11146 CELL NO. 1 THROUGH CELL NO. 3, MISCELLANEOUS SECTIONS AND DETAILS, SHEET 1
H1C11147 CELL NO. 1 THROUGH CELL NO. 3, MISCELLANEOUS SECTIONS AND DETAILS, SHEET 2
H1C11155 CELL NO. 3 LEACHATE COLLECTION SYSTEM LAYOUT & DETAILS

GEORGIA
DEPARTMENT OF NATURAL RESOURCES
ENVIRONMENTAL PROTECTION DIVISION
Approved
Solid Waste Management Program
Approved By: Keith Stevens
Digitally signed by Keith Stevens
Date: 2022.10.25 08:59:48 -04'00'

NO. 27185
R. GRANT LANE
9/27/22

GARY H. McWHORTER
9/27/22

Southern Company Generation
Engineering and Construction Services
FOR
Georgia Power Company

PLANT WANSLEY
COAL COMBUSTION BY-PRODUCT DISPOSAL FACILITY
CELL NO. 3
SECTIONS THRU STACK

REVISION 0 DATE 09-23-2022
CCR LF PERMIT APPLICATION [BY HHNT, INC.]

BY	CHK'D	CIVIL APPR	ELECT APPR	I/C APPR	MECH APPR	DISC MGR
ANR	RBL		☒	☒	☒	☒

SCALE	DRAWING NUMBER	SHEET	CONT'D	REV
AS NOTED	**H1C11137**	1	FINAL	0

Acad2008 ANSI F: 40x28

target ZERO Every day, every job, safety.

target ZERO Every day, every job, safely.

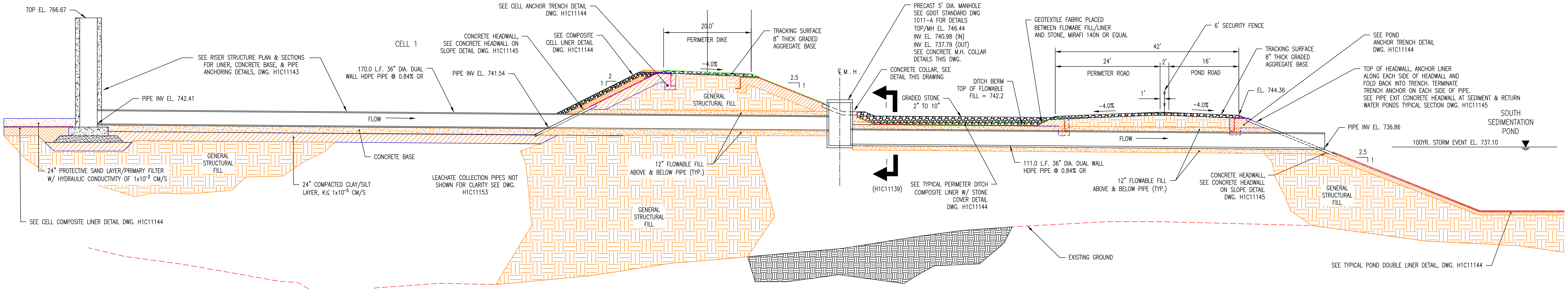
TOP EL. 766.67
SEE RISER STRUCTURE PLAN & SECTIONS FOR LINER, CONCRETE BASE, & PIPE ANCHORING DETAILS, DWG. H1C11143
PIPE INV EL. 742.41
CELL 1
170.0 L.F. 36" DIA. DUAL WALL HDPE PIPE @ 0.84% GR
PIPE INV EL. 741.54
CONCRETE HEADWALL, SEE CONCRETE HEADWALL ON SLOPE DETAIL DWG. H1C11145
SEE COMPOSITE CELL LINER DETAIL DWG. H1C11144
SEE CELL ANCHOR TRENCH DETAIL DWG. H1C11144
20.0'
PERIMETER DIKE
-4.0%
TRACKING SURFACE 8" THICK GRADED AGGREGATE BASE
2
1
2.5
1
FLOW
GENERAL STRUCTURAL FILL
CONCRETE BASE
24" PROTECTIVE SAND LAYER/PRIMARY FILTER W/ HYDRAULIC CONDUCTIVITY OF 1x10^{-2} CM/S
24" COMPACTED CLAY/SILT LAYER, K≤ 1x10^{-5} CM/S
LEACHATE COLLECTION PIPES NOT SHOWN FOR CLARITY SEE DWG. H1C11153
SEE CELL COMPOSITE LINER DETAIL DWG. H1C11144
12" FLOWABLE FILL ABOVE & BELOW PIPE (TYP.)
℄ M.H.
PRECAST 5' DIA. MANHOLE SEE GDOT STANDARD DWG 1011-A FOR DETAILS TOP/MH EL. 746.44 INV EL. 740.98 (IN) INV EL. 737.79 (OUT) SEE CONCRETE M.H. COLLAR DETAILS THIS DWG.
CONCRETE COLLAR, SEE DETAIL THIS DRAWING
GRADED STONE 2" TO 10"
DITCH BERM TOP OF FLOWABLE FILL = 742.2
(H1C11139)
SEE TYPICAL PERIMETER DITCH COMPOSITE LINER W/ STONE COVER DETAIL DWG. H1C11144
GEOTEXTILE FABRIC PLACED BETWEEN FLOWABE FILL/LINER AND STONE, MIRAFI 140N OR EQUAL
111.0 L.F. 36" DIA. DUAL WALL HDPE PIPE @ 0.84% GR
6' SECURITY FENCE
42'
24'
2'
16'
PERIMETER ROAD
POND ROAD
1'
-4.0%
-4.0%
TRACKING SURFACE 8" THICK GRADED AGGREGATE BASE
EL. 744.36
SEE POND ANCHOR TRENCH DETAIL DWG. H1C11144
TOP OF HEADWALL, ANCHOR LINER ALONG EACH SIDE OF HEADWALL AND FOLD BACK INTO TRENCH. TERMINATE TRENCH ANCHOR ON EACH SIDE OF PIPE. SEE PIPE EXIT CONCRETE HEADWALL AT SEDIMENT & RETURN WATER PONDS TYPICAL SECTION DWG. H1C11145
SOUTH SEDIMENTATION POND
PIPE INV EL. 736.86
100YR. STORM EVENT EL. 737.10
2.5
1
CONCRETE HEADWALL, SEE CONCRETE HEADWALL ON SLOPE DETAIL DWG. H1C11145
EXISTING GROUND
SEE TYPICAL POND DOUBLE LINER DETAIL, DWG. H1C11144

RISER SECTION AT CELL 1

1" = 10'

(H1C11125)

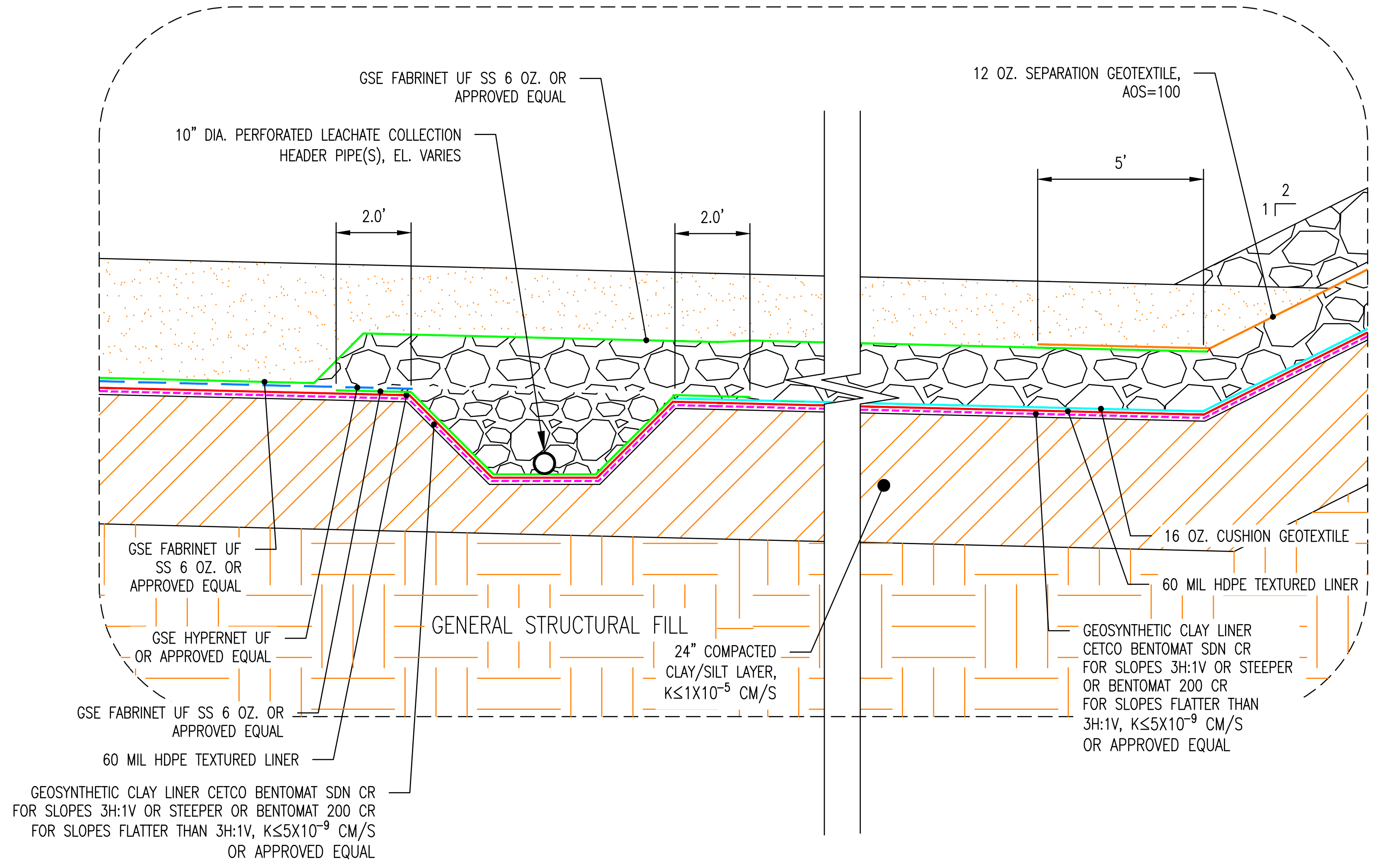
GSE FABRINET UF SS 6 OZ. OR APPROVED EQUAL
10" DIA. PERFORATED LEACHATE COLLECTION HEADER PIPE(S), EL. VARIES
2.0'
2.0'
5'
2
1
12 OZ. SEPARATION GEOTEXTILE, AOS=100
16 OZ. CUSHION GEOTEXTILE
60 MIL HDPE TEXTURED LINER
GEOSYNTHETIC CLAY LINER CETCO BENTOMAT SDN CR FOR SLOPES 3H:1V OR STEEPER OR BENTOMAT 200 CR FOR SLOPES FLATTER THAN 3H:1V, K≤5X10^{-9} CM/S OR APPROVED EQUAL
GSE FABRINET UF SS 6 OZ. OR APPROVED EQUAL
GSE HYPERNET UF OR APPROVED EQUAL
GENERAL STRUCTURAL FILL
24" COMPACTED CLAY/SILT LAYER, K≤1X10^{-5} CM/S
GSE FABRINET UF SS 6 OZ. OR APPROVED EQUAL
60 MIL HDPE TEXTURED LINER
GEOSYNTHETIC CLAY LINER CETCO BENTOMAT SDN CR FOR SLOPES 3H:1V OR STEEPER OR BENTOMAT 200 CR FOR SLOPES FLATTER THAN 3H:1V, K≤5X10^{-9} CM/S OR APPROVED EQUAL

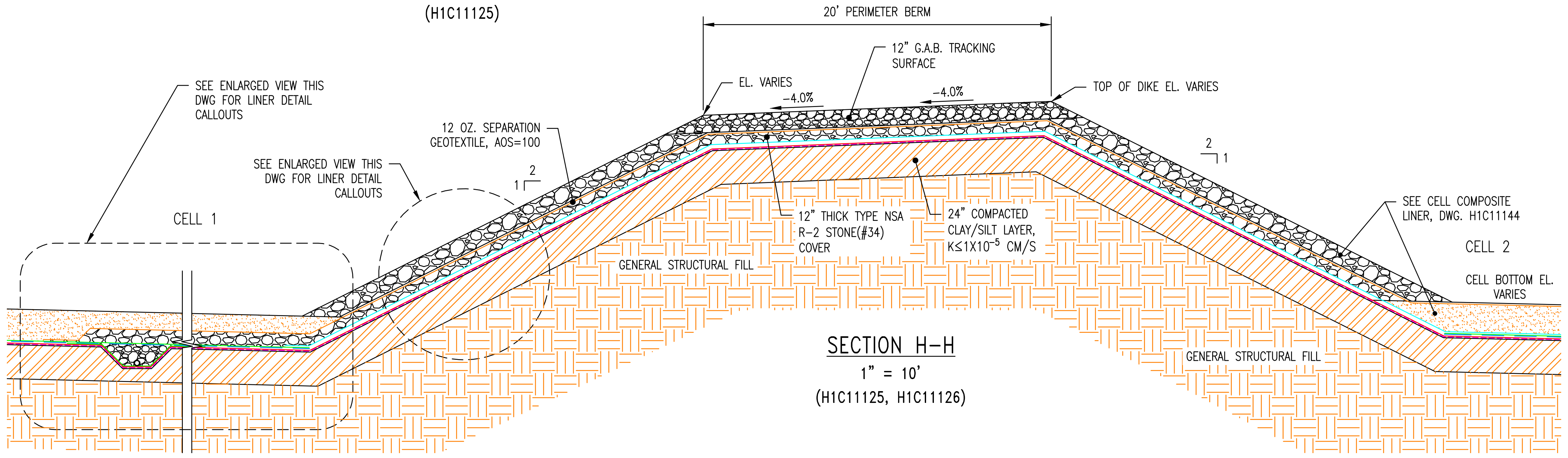
20' PERIMETER BERM
12" G.A.B. TRACKING SURFACE
EL. VARIES
-4.0%
-4.0%
TOP OF DIKE EL. VARIES
SEE ENLARGED VIEW THIS DWG FOR LINER DETAIL CALLOUTS
12 OZ. SEPARATION GEOTEXTILE, AOS=100
SEE ENLARGED VIEW THIS DWG FOR LINER DETAIL CALLOUTS
2
1
2
1
CELL 1
12" THICK TYPE NSA R-2 STONE(#34) COVER
24" COMPACTED CLAY/SILT LAYER, K≤1X10^{-5} CM/S
GENERAL STRUCTURAL FILL
SEE CELL COMPOSITE LINER, DWG. H1C11144
CELL 2
CELL BOTTOM EL. VARIES
GENERAL STRUCTURAL FILL

SECTION H–H

1" = 10'

(H1C11125, H1C11126)

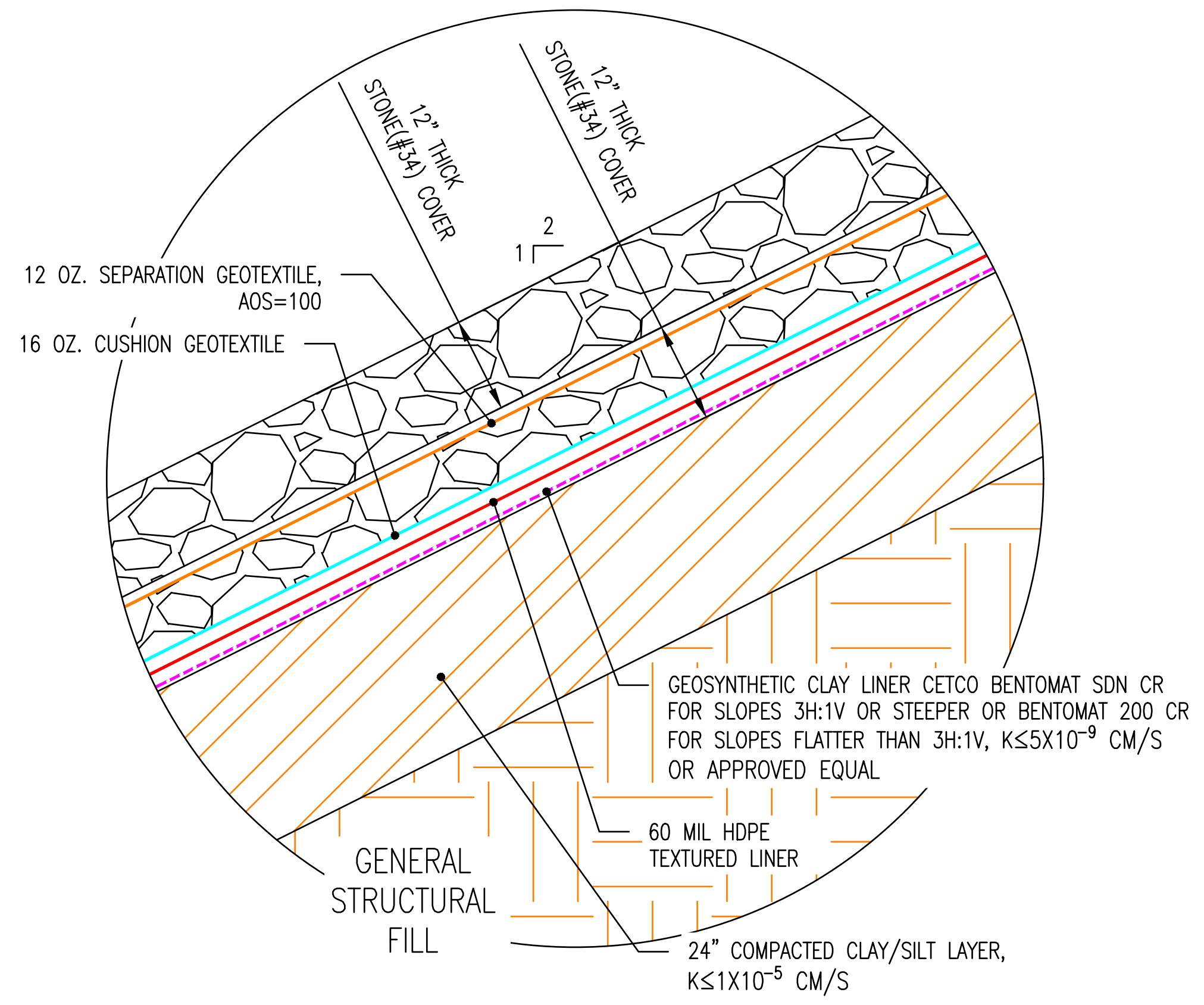
12" THICK STONE(#34) COVER
12" THICK STONE(#34) COVER
2
1
12 OZ. SEPARATION GEOTEXTILE, AOS=100
16 OZ. CUSHION GEOTEXTILE
GEOSYNTHETIC CLAY LINER CETCO BENTOMAT SDN CR FOR SLOPES 3H:1V OR STEEPER OR BENTOMAT 200 CR FOR SLOPES FLATTER THAN 3H:1V, K≤5X10^{-9} CM/S OR APPROVED EQUAL
60 MIL HDPE TEXTURED LINER
GENERAL STRUCTURAL FILL
24" COMPACTED CLAY/SILT LAYER, K≤1X10^{-5} CM/S

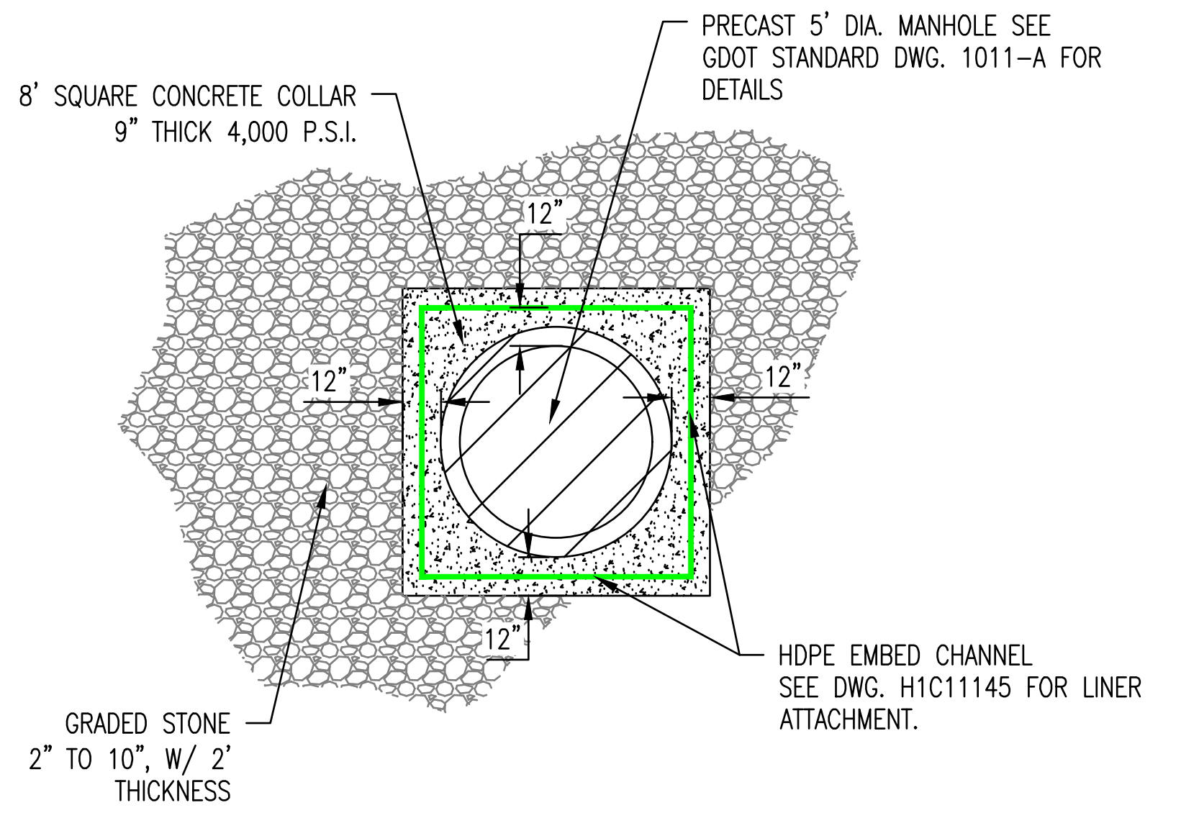
8' SQUARE CONCRETE COLLAR 9" THICK 4,000 P.S.I.
PRECAST 5' DIA. MANHOLE SEE GDOT STANDARD DWG. 1011-A FOR DETAILS
12"
12"
12"
12"
GRADED STONE 2" TO 10", W/ 2' THICKNESS
HDPE EMBED CHANNEL SEE DWG. H1C11145 FOR LINER ATTACHMENT.

CONCRETE MANHOLE COLLAR
PLAN VIEW

NOT TO SCALE

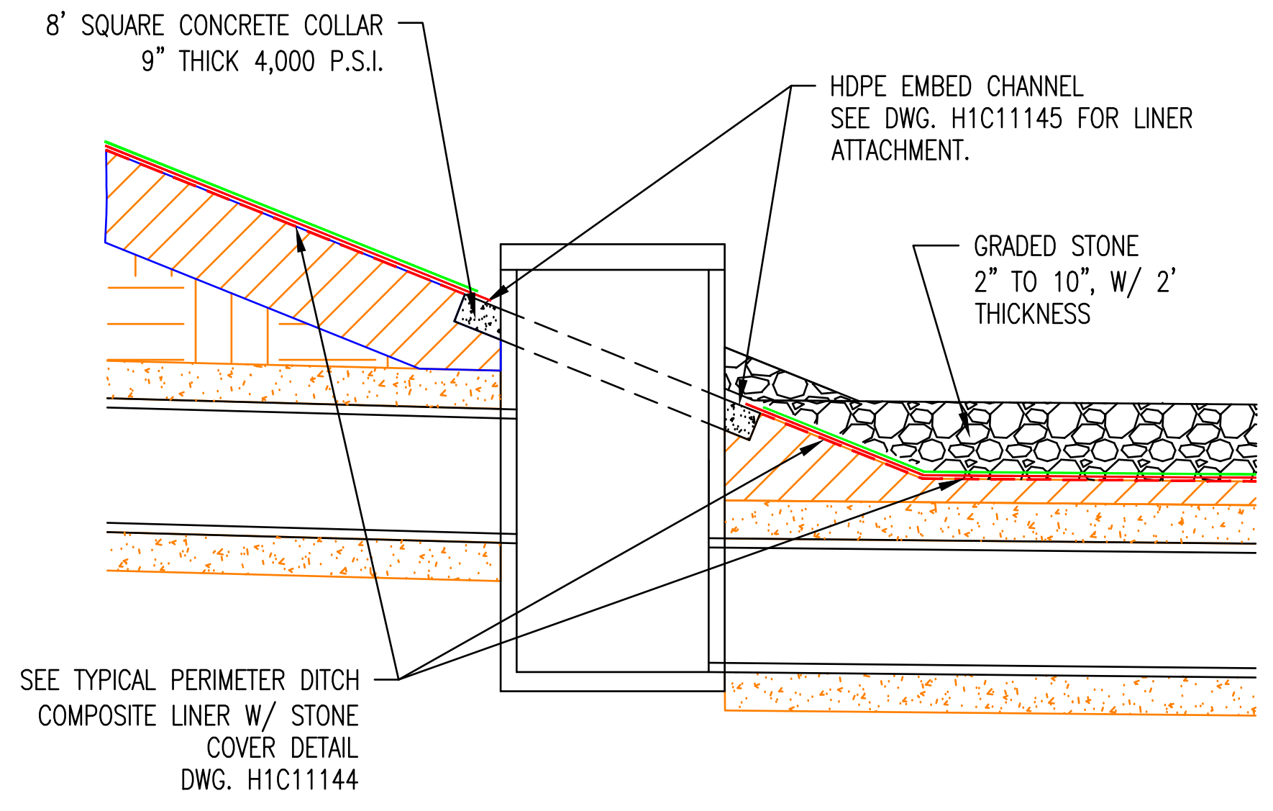
8' SQUARE CONCRETE COLLAR 9" THICK 4,000 P.S.I.
HDPE EMBED CHANNEL SEE DWG. H1C11145 FOR LINER ATTACHMENT.
GRADED STONE 2" TO 10", W/ 2' THICKNESS
SEE TYPICAL PERIMETER DITCH COMPOSITE LINER W/ STONE COVER DETAIL DWG. H1C11144

CONCRETE MANHOLE COLLAR
SECTION

NOT TO SCALE

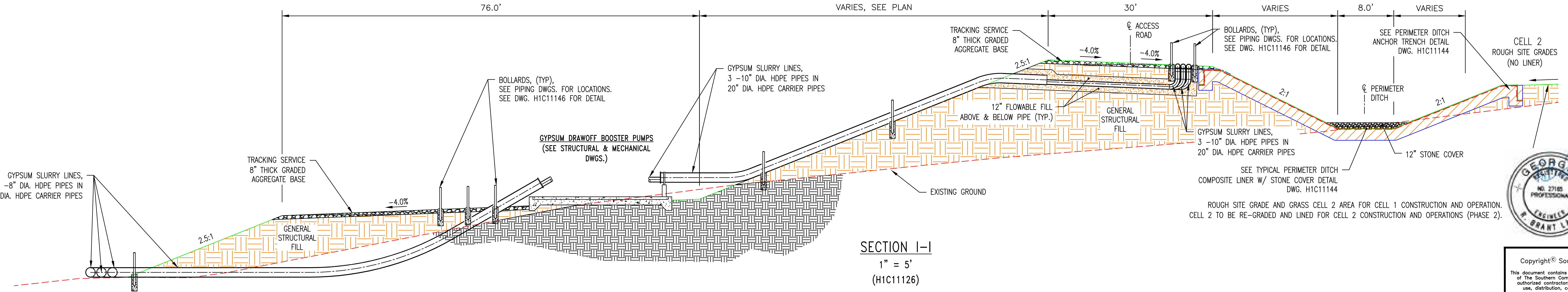
76.0'
VARIES, SEE PLAN
30'
VARIES
8.0'
VARIES
GYPSUM SLURRY LINES, 3 -8" DIA. HDPE PIPES IN 18" DIA. HDPE CARRIER PIPES
TRACKING SERVICE 8" THICK GRADED AGGREGATE BASE
-4.0%
2.5:1
GENERAL STRUCTURAL FILL
BOLLARDS, (TYP), SEE PIPING DWGS. FOR LOCATIONS. SEE DWG. H1C11146 FOR DETAIL
GYPSUM DRAWOFF BOOSTER PUMPS (SEE STRUCTURAL & MECHANICAL DWGS.)
GYPSUM SLURRY LINES, 3 -10" DIA. HDPE PIPES IN 20" DIA. HDPE CARRIER PIPES
TRACKING SERVICE 8" THICK GRADED AGGREGATE BASE
℄ ACCESS ROAD
-4.0%
-4.0%
2.5:1
12" FLOWABLE FILL ABOVE & BELOW PIPE (TYP.)
GENERAL STRUCTURAL FILL
EXISTING GROUND
BOLLARDS, (TYP), SEE PIPING DWGS. FOR LOCATIONS. SEE DWG. H1C11146 FOR DETAIL
GYPSUM SLURRY LINES, 3 -10" DIA. HDPE PIPES IN 20" DIA. HDPE CARRIER PIPES
2:1
SEE PERIMETER DITCH ANCHOR TRENCH DETAIL DWG. H1C11144
℄ PERIMETER DITCH
2:1
12" STONE COVER
SEE TYPICAL PERIMETER DITCH COMPOSITE LINER W/ STONE COVER DETAIL DWG. H1C11144
CELL 2 ROUGH SITE GRADES (NO LINER)
ROUGH SITE GRADE AND GRASS CELL 2 AREA FOR CELL 1 CONSTRUCTION AND OPERATION. CELL 2 TO BE RE-GRADED AND LINED FOR CELL 2 CONSTRUCTION AND OPERATIONS (PHASE 2).

SECTION I–I

1" = 5'

(H1C11126)

GEORGIA
DEPARTMENT OF NATURAL RESOURCES
ENVIRONMENTAL PROTECTION DIVISION
Approved
Solid Waste Management Program
Approved By: Keith Stevens
Digitally signed by Keith Stevens
Date: 2022.10.25 08:59:48 -04'00'

NO. 27185
R. BRANT LANE
9/27/22

9/27/22

NOTES:

1. ALL EARTHEN STRUCTURES ARE ENGINEERED TO WITHSTAND A HORIZONTAL FORCE OF 0.17G

REFERENCES:

H1C11120	TITLE SHEET AND DRAWING INDEX
H1C11125	CELL NO. 1 SITE DEVELOPMENT, BASE GRADING PLAN
H1C11131	CELL NO. 2 SITE DEVELOPMENT, BASE GRADING PLAN
H1C11144	CELL NO. 1 THROUGH CELL NO. 3, MISCELLANEOUS DETAILS, SHEET 2
H1C11145	CELL NO. 1 THROUGH CELL NO. 3, MISCELLANEOUS DETAILS, SHEET 3
H1C11146	CELL NO. 1 THROUGH CELL NO. 3, MISCELLANEOUS SECTIONS AND DETAILS, SHEET 1

Southern Company Services, Inc.

Southern Company Generation
Engineering and Construction Services
FOR

Georgia Power Company

PLANT WANSLEY
COAL COMBUSTION BY–PRODUCT DISPOSAL FACILITY
CELL NO. 1 THROUGH CELL NO. 3
MISCELLANEOUS SECTIONS
SHEET 1

REVISION 0	DATE 09-23-2022
CCR LF PERMIT APPLICATION [BY HHNT, INC.]	

BY	CHK'D	CIVIL APPR	ELECT APPR	I/C APPR	MECH APPR	DISC MGR
ANR	RBL		☒	☒	☒	☒

SCALE	DRAWING NUMBER	SHEET	CONT'D	REV
AS NOTED	**H1C11138**	1	FINAL	0

REVISION	DATE	REVISION	DATE	REVISION	DATE	REVISION	DATE	REVISION	DATE	REVISION	DATE

BY	CHK'D	CIVIL APPR	ELECT APPR	I/C APPR	MECH APPR	DISC MGR

Acad2008 ANSI F: 40x28

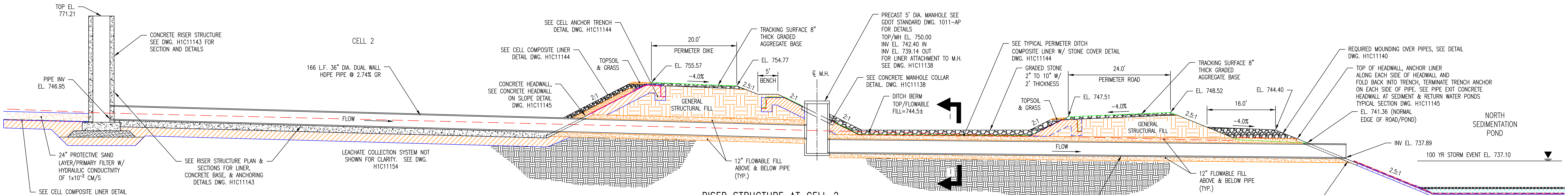
TOP EL. 771.21
CONCRETE RISER STRUCTURE SEE DWG. H1C11143 FOR SECTION AND DETAILS
CELL 2
PIPE INV EL. 746.95
166 L.F. 36" DIA. DUAL WALL HDPE PIPE @ 2.74% GR
FLOW
24" PROTECTIVE SAND LAYER/PRIMARY FILTER W/ HYDRAULIC CONDUCTIVITY OF 1x10⁻² CM/S
SEE CELL COMPOSITE LINER DETAIL DWG. H1C11144
SEE RISER STRUCTURE PLAN & SECTIONS FOR LINER, CONCRETE BASE, & ANCHORING DETAILS DWG. H1C11143
LEACHATE COLLECTION SYSTEM NOT SHOWN FOR CLARITY. SEE DWG. H1C11154
SEE CELL ANCHOR TRENCH DETAIL DWG. H1C11144
SEE CELL COMPOSITE LINER DETAIL DWG. H1C11144
TOPSOIL & GRASS
CONCRETE HEADWALL, SEE CONCRETE HEADWALL ON SLOPE DETAIL DWG. H1C11145
20.0'
PERIMETER DIKE
EL. 755.57
-4.0%
TRACKING SURFACE 8" THICK GRADED AGGREGATE BASE
EL. 754.77
5'
BENCH
2:1
2.5:1
GENERAL STRUCTURAL FILL
12" FLOWABLE FILL ABOVE & BELOW PIPE (TYP.)
℄ M.H.
PRECAST 5' DIA. MANHOLE SEE GDOT STANDARD DWG. 1011-AP FOR DETAILS TOP/MH EL. 750.00 INV EL. 742.40 IN INV EL. 739.14 OUT FOR LINER ATTACHMENT TO M.H. SEE DWG. H1C11138
SEE CONCRETE MANHOLE COLLAR DETAIL. DWG. H1C11138
DITCH BERM TOP/FLOWABLE FILL=744.5±
I
(THIS DWG)
SEE TYPICAL PERIMETER DITCH COMPOSITE LINER W/ STONE COVER DETAIL DWG. H1C11144
GRADED STONE 2" TO 10" W/ 2' THICKNESS
TOPSOIL & GRASS
24.0'
PERIMETER ROAD
EL. 747.51
-4.0%
TRACKING SURFACE 8" THICK GRADED AGGREGATE BASE
EL. 748.52
16.0'
EL. 744.40
GENERAL STRUCTURAL FILL
FLOW
125.3 L.F. 36" DIA. DUAL WALL HDPE PIPE @ 1.00% GR
12" FLOWABLE FILL ABOVE & BELOW PIPE (TYP.)
CONCRETE HEADWALL, SEE CONCRETE HEADWALL ON SLOPE DETAIL DWG. H1C11145
REQUIRED MOUNDING OVER PIPES, SEE DETAIL DWG. H1C11140
TOP OF HEADWALL, ANCHOR LINER ALONG EACH SIDE OF HEADWALL AND FOLD BACK INTO TRENCH, TERMINATE TRENCH ANCHOR ON EACH SIDE OF PIPE. SEE PIPE EXIT CONCRETE HEADWALL AT SEDIMENT & RETURN WATER PONDS TYPICAL SECTION DWG. H1C11145
EL. 741.36 (NORMAL EDGE OF ROAD/POND)
NORTH SEDIMENTATION POND
INV EL. 737.89
100 YR STORM EVENT EL. 737.10
SEE TYPICAL POND DOUBLE LINER DETAIL DWG. H1C11144

RISER STRUCTURE AT CELL 2

1"=10'
(H1C11131)

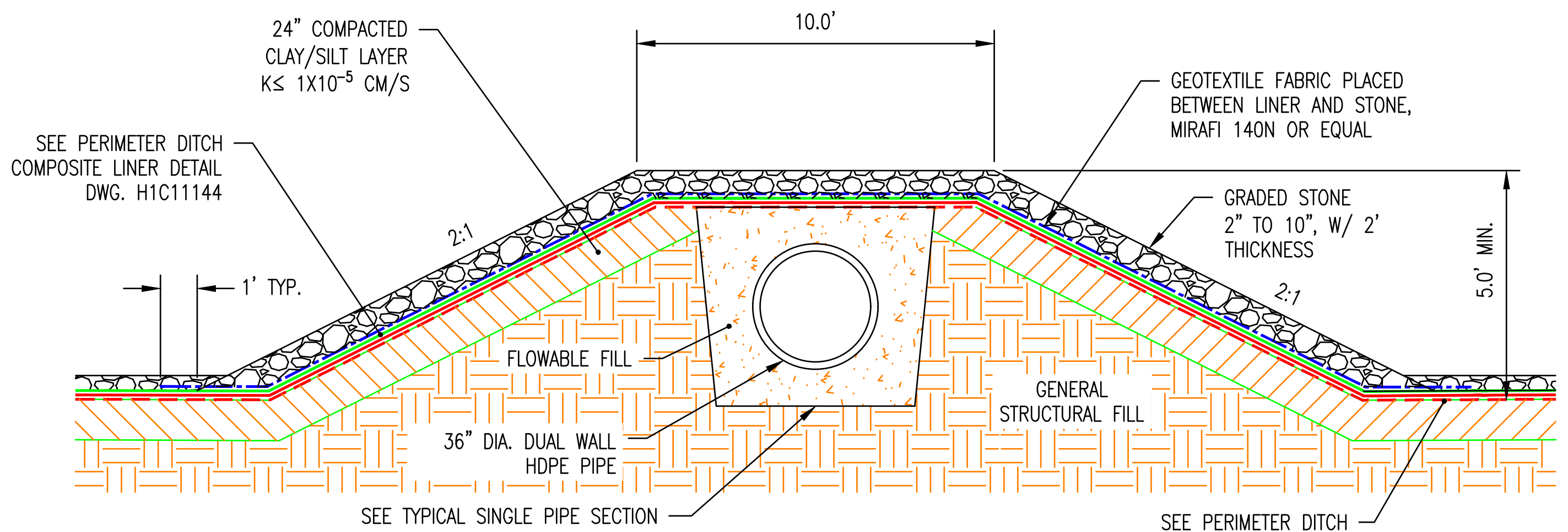
24" COMPACTED CLAY/SILT LAYER K≤ 1X10⁻⁵ CM/S
10.0'
GEOTEXTILE FABRIC PLACED BETWEEN LINER AND STONE, MIRAFI 140N OR EQUAL
SEE PERIMETER DITCH COMPOSITE LINER DETAIL DWG. H1C11144
GRADED STONE 2" TO 10", W/ 2' THICKNESS
2:1
1' TYP.
5.0' MIN.
FLOWABLE FILL
GENERAL STRUCTURAL FILL
36" DIA. DUAL WALL HDPE PIPE
SEE TYPICAL SINGLE PIPE SECTION DETAIL. DWG. H1C11145
SEE PERIMETER DITCH COMPOSITE LINER DETAIL DWG. H1C11144

SECTION I-I

NTS
(THIS DWG)

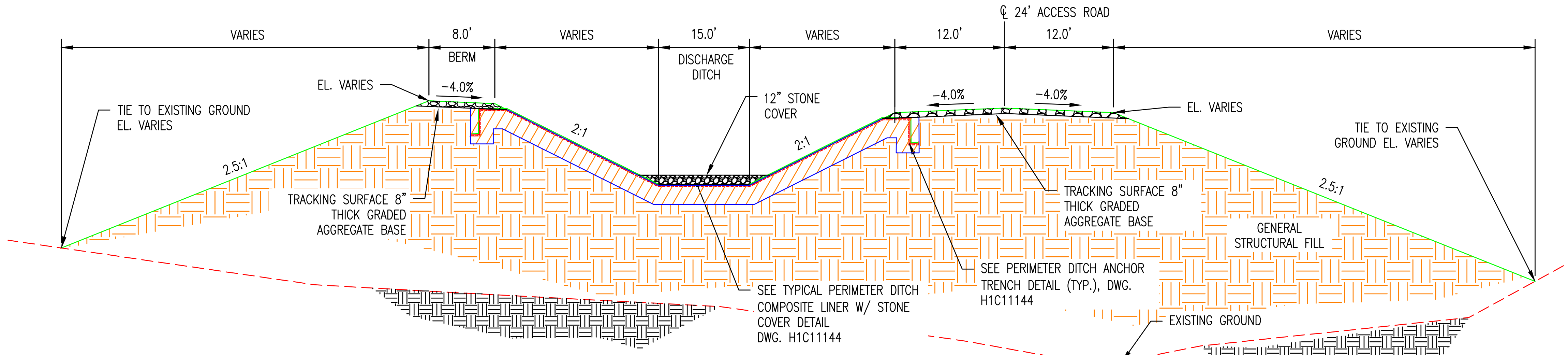
℄ 24' ACCESS ROAD
VARIES
8.0'
BERM
15.0'
DISCHARGE DITCH
12.0'
EL. VARIES
-4.0%
TIE TO EXISTING GROUND EL. VARIES
12" STONE COVER
2:1
2.5:1
TRACKING SURFACE 8" THICK GRADED AGGREGATE BASE
SEE TYPICAL PERIMETER DITCH COMPOSITE LINER W/ STONE COVER DETAIL DWG. H1C11144
SEE PERIMETER DITCH ANCHOR TRENCH DETAIL (TYP.), DWG. H1C11144
GENERAL STRUCTURAL FILL
EXISTING GROUND

CELL 3 TO CELL 2 DISCHARGE DITCH TYPICAL SECTION

1"=10'
(H1C11133)

NOTES:

1. FIELD WRAP 8" FRP WYE IN CONTAINMENT BOX.
2, DRILL 10"ø HOLE FOR 8"ø FRP. SEAL WITH EXPANDABLE FOAM AFTER INSTALLING FRP. (FIELD DRILL)
3. FILL CONTAINMENT BOX WITH FLOWABLE FILL AFTER INSTALLING FRP.
4. TEMPORARILY SUPPORT 8" FRP WHILE APPLYING FLOWABLE FILL FOR SUPPORT AND TO PREVENT FLOATING 8" FRP.
5. PRIME PIPE SURFACE PRIOR TO PLACING SWELLSTOP. PLACE SWELLSTOP AND SUPPORT WHEN PLACING CONCRETE, ENSURING IT DOES NOT BECOME DISLODGED.

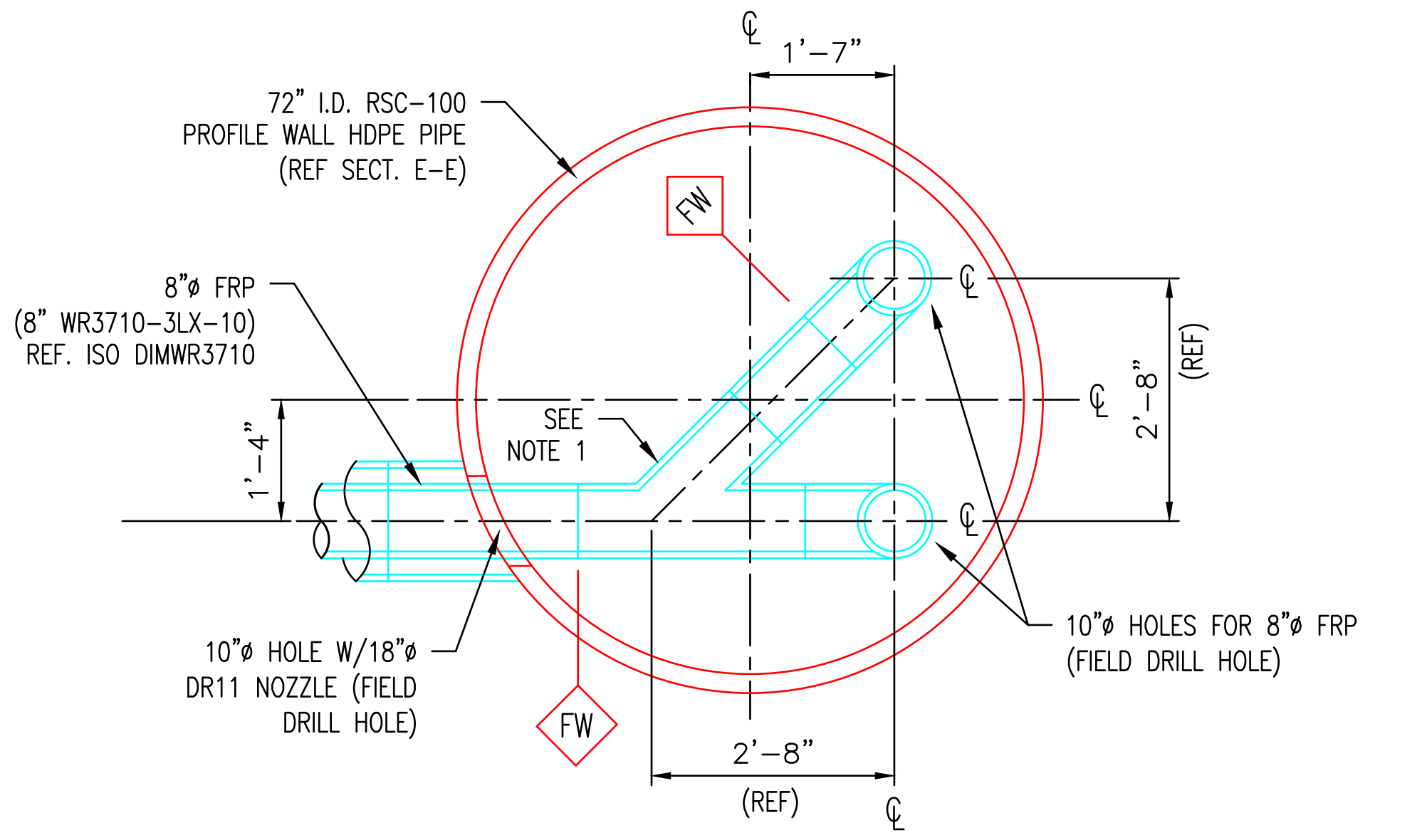
72" I.D. RSC-100 PROFILE WALL HDPE PIPE (REF SECT. E-E)
℄
1'-7"
FW
8"ø FRP (8" WR3710-3LX-10) REF. ISO DIMWR3710
SEE NOTE 1
1'-4"
2'-8" (REF)
10"ø HOLE W/18"ø DR11 NOZZLE (FIELD DRILL HOLE)
10"ø HOLES FOR 8"ø FRP (FIELD DRILL HOLE)

DETAIL 2

NTS

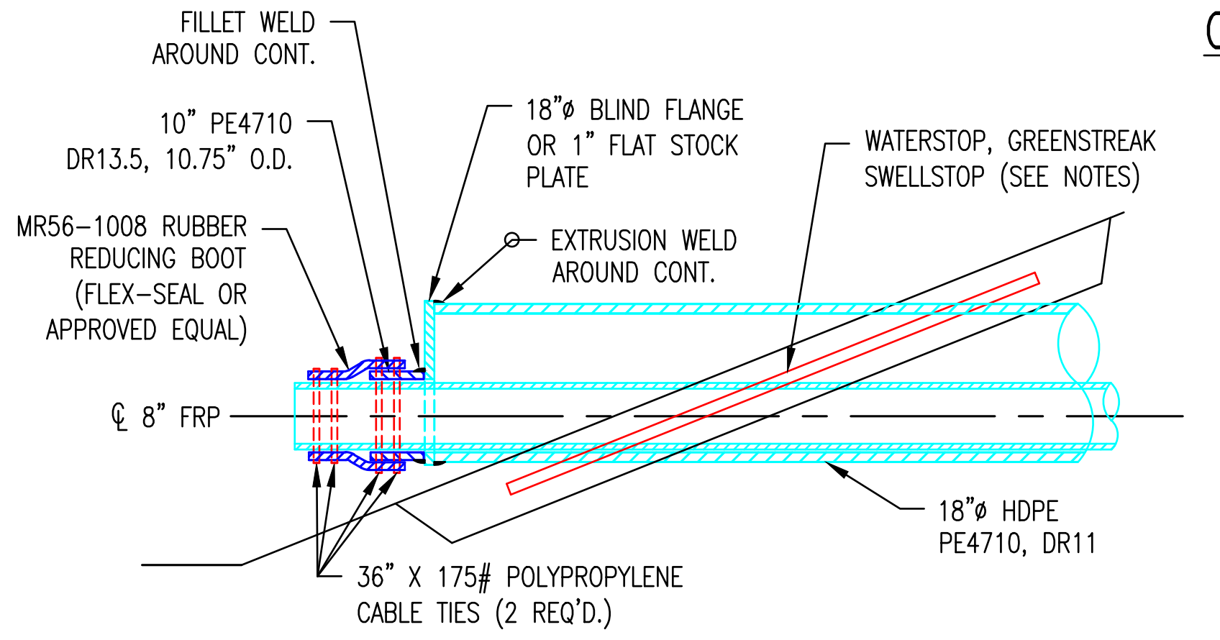
FILLET WELD AROUND CONT.
10" PE4710 DR13.5, 10.75" O.D.
MR56-1008 RUBBER REDUCING BOOT (FLEX-SEAL OR APPROVED EQUAL)
℄ 8" FRP
18"ø BLIND FLANGE OR 1" FLAT STOCK PLATE
EXTRUSION WELD AROUND CONT.
WATERSTOP, GREENSTREAK SWELLSTOP (SEE NOTES)
18"ø HDPE PE4710, DR11
36" X 175# POLYPROPYLENE CABLE TIES (2 REQ'D.)

DETAIL 1

NTS

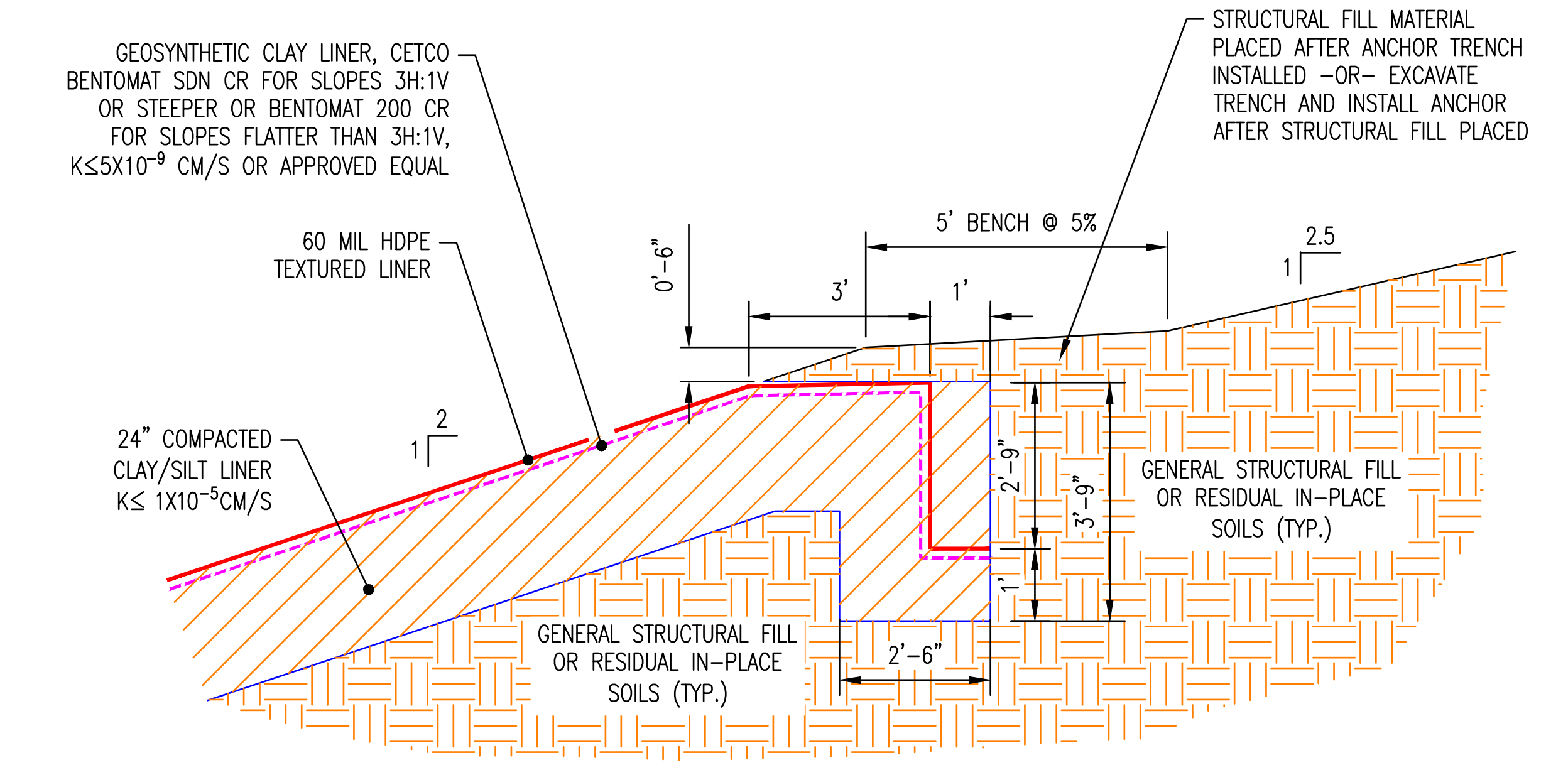
GEOSYNTHETIC CLAY LINER, CETCO BENTOMAT SDN CR FOR SLOPES 3H:1V OR STEEPER OR BENTOMAT 200 CR FOR SLOPES FLATTER THAN 3H:1V, K≤5X10⁻⁹ CM/S OR APPROVED EQUAL
STRUCTURAL FILL MATERIAL PLACED AFTER ANCHOR TRENCH INSTALLED -OR- EXCAVATE TRENCH AND INSTALL ANCHOR AFTER STRUCTURAL FILL PLACED
60 MIL HDPE TEXTURED LINER
5' BENCH @ 5%
0'-6"
3'
1'
2.5
1
2
24" COMPACTED CLAY/SILT LINER K≤ 1X10⁻⁵CM/S
2'-9"
3'-9"
GENERAL STRUCTURAL FILL OR RESIDUAL IN-PLACE SOILS (TYP.)
2'-6"

PERIMETER DITCH WITH ANCHOR TRENCH DETAIL (ANCHOR ON DIKE SLOPE - MATCH ROAD ELEVATION AT ANCHOR)

N.T.S.

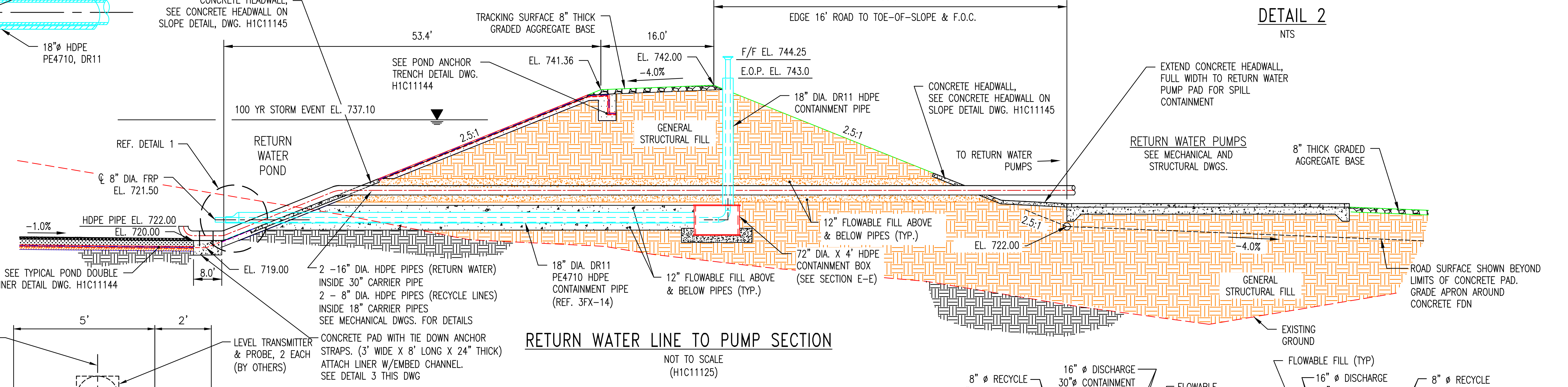
CONCRETE HEADWALL, SEE CONCRETE HEADWALL ON SLOPE DETAIL, DWG. H1C11145
TRACKING SURFACE 8" THICK GRADED AGGREGATE BASE
53.4'
16.0'
50.0'
EDGE 16' ROAD TO TOE-OF-SLOPE & F.O.C.
SEE POND ANCHOR TRENCH DETAIL DWG. H1C11144
EL. 741.36
EL. 742.00
-4.0%
F/F EL. 744.25
E.O.P. EL. 743.0
18" DIA. DR11 HDPE CONTAINMENT PIPE
CONCRETE HEADWALL, SEE CONCRETE HEADWALL ON SLOPE DETAIL DWG. H1C11145
EXTEND CONCRETE HEADWALL, FULL WIDTH TO RETURN WATER PUMP PAD FOR SPILL CONTAINMENT
100 YR STORM EVENT EL. 737.10
RETURN WATER POND
REF. DETAIL 1
℄ 8" DIA. FRP EL. 721.50
2.5:1
GENERAL STRUCTURAL FILL
TO RETURN WATER PUMPS
RETURN WATER PUMPS SEE MECHANICAL AND STRUCTURAL DWGS.
8" THICK GRADED AGGREGATE BASE
-1.0%
HDPE PIPE EL. 722.00
EL. 720.00
SEE TYPICAL POND DOUBLE LINER DETAIL DWG. H1C11144
8.0'
EL. 719.00
2 -16" DIA. HDPE PIPES (RETURN WATER) INSIDE 30" CARRIER PIPE 2 - 8" DIA. HDPE PIPES (RECYCLE LINES) INSIDE 18" CARRIER PIPES SEE MECHANICAL DWGS. FOR DETAILS
18" DIA. DR11 PE4710 HDPE CONTAINMENT PIPE (REF. 3FX-14)
12" FLOWABLE FILL ABOVE & BELOW PIPES (TYP.)
72" DIA. X 4' HDPE CONTAINMENT BOX (SEE SECTION E-E)
EL. 722.00
-4.0%
ROAD SURFACE SHOWN BEYOND LIMITS OF CONCRETE PAD. GRADE APRON AROUND CONCRETE FDN
EXISTING GROUND
LEVEL TRANSMITTER & PROBE, 2 EACH (BY OTHERS)
CONCRETE PAD WITH TIE DOWN ANCHOR STRAPS. (3' WIDE X 8' LONG X 24" THICK) ATTACH LINER W/EMBED CHANNEL. SEE DETAIL 3 THIS DWG

RETURN WATER LINE TO PUMP SECTION

NOT TO SCALE
(H1C11125)

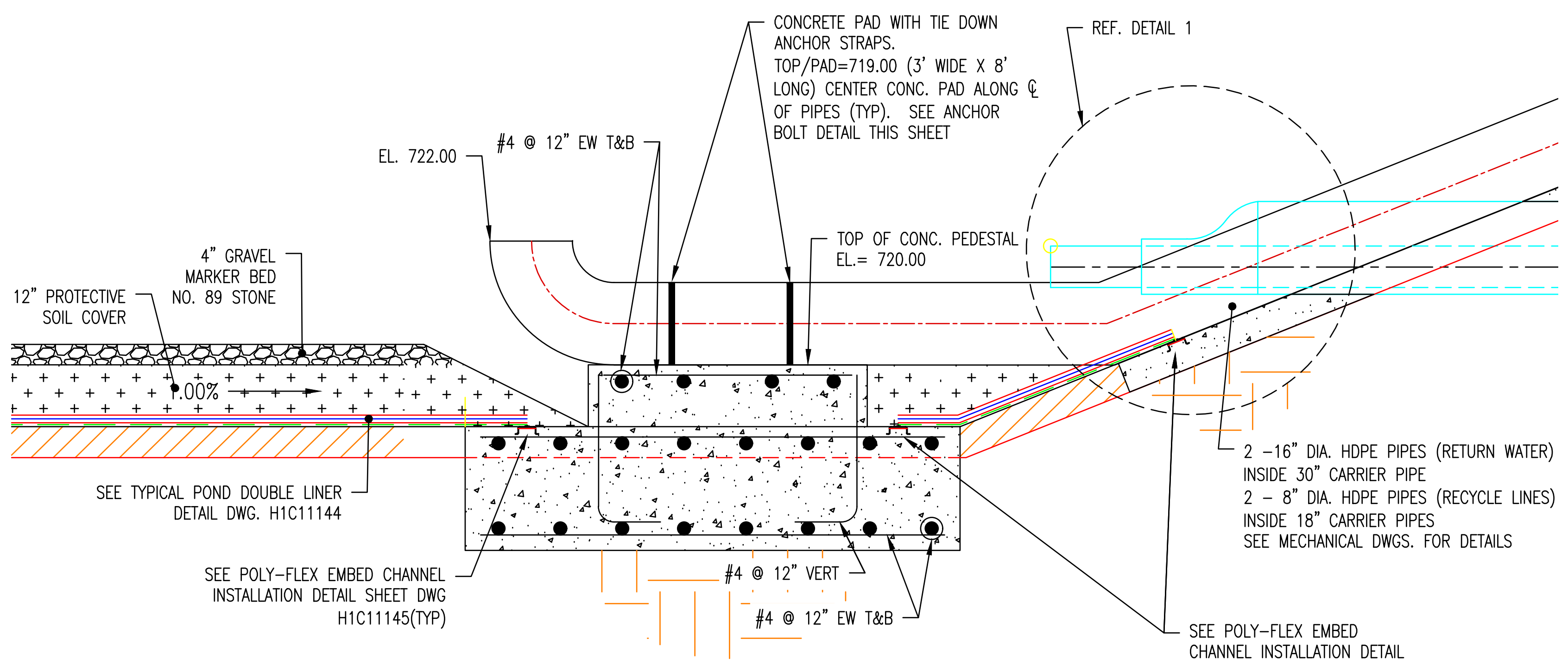
CONCRETE PAD WITH TIE DOWN ANCHOR STRAPS. TOP/PAD=719.00 (3' WIDE X 8' LONG) CENTER CONC. PAD ALONG ℄ OF PIPES (TYP). SEE ANCHOR BOLT DETAIL THIS SHEET
REF. DETAIL 1
EL. 722.00
#4 @ 12" EW T&B
TOP OF CONC. PEDESTAL EL.= 720.00
4" GRAVEL MARKER BED NO. 89 STONE
12" PROTECTIVE SOIL COVER
1.00%
SEE TYPICAL POND DOUBLE LINER DETAIL DWG. H1C11144
2 -16" DIA. HDPE PIPES (RETURN WATER) INSIDE 30" CARRIER PIPE 2 - 8" DIA. HDPE PIPES (RECYCLE LINES) INSIDE 18" CARRIER PIPES SEE MECHANICAL DWGS. FOR DETAILS
SEE POLY-FLEX EMBED CHANNEL INSTALLATION DETAIL SHEET DWG H1C11145(TYP)
#4 @ 12" VERT
#4 @ 12" EW T&B
SEE POLY-FLEX EMBED CHANNEL INSTALLATION DETAIL SHEET DWG H1C11145(TYP)

DETAIL 3

NOT TO SCALE
(H1C11125)

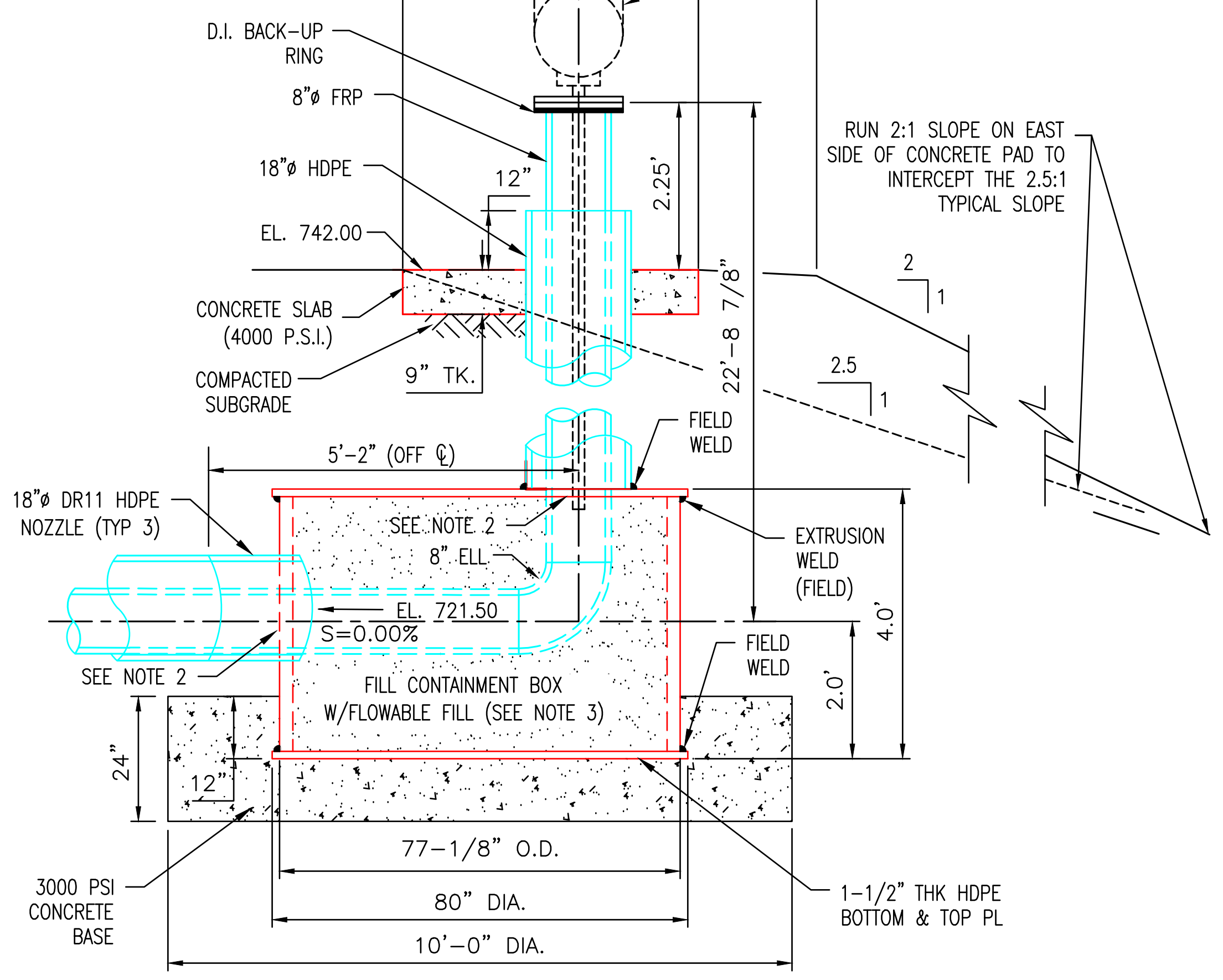
℄ 8"-WR3710-3LX-10 LEVEL TRANSMITTER PIPING
5'
2'
D.I. BACK-UP RING
8"ø FRP
18"ø HDPE
12"
2.25'
EL. 742.00
CONCRETE SLAB (4000 P.S.I.)
COMPACTED SUBGRADE
9" TK.
22'-8 7/8"
RUN 2:1 SLOPE ON EAST SIDE OF CONCRETE PAD TO INTERCEPT THE 2.5:1 TYPICAL SLOPE
2
1
2.5
1
5'-2" (OFF ℄)
FIELD WELD
18"ø DR11 HDPE NOZZLE (TYP 3)
SEE NOTE 2
8" ELL
EXTRUSION WELD (FIELD)
EL. 721.50
S=0.00%
SEE NOTE 2
FIELD WELD
4.0'
2.0'
FILL CONTAINMENT BOX W/FLOWABLE FILL (SEE NOTE 3)
24"
12"
3000 PSI CONCRETE BASE
77-1/8" O.D.
80" DIA.
10'-0" DIA.
1-1/2" THK HDPE BOTTOM & TOP PL

SECTION E-E

NOT TO SCALE

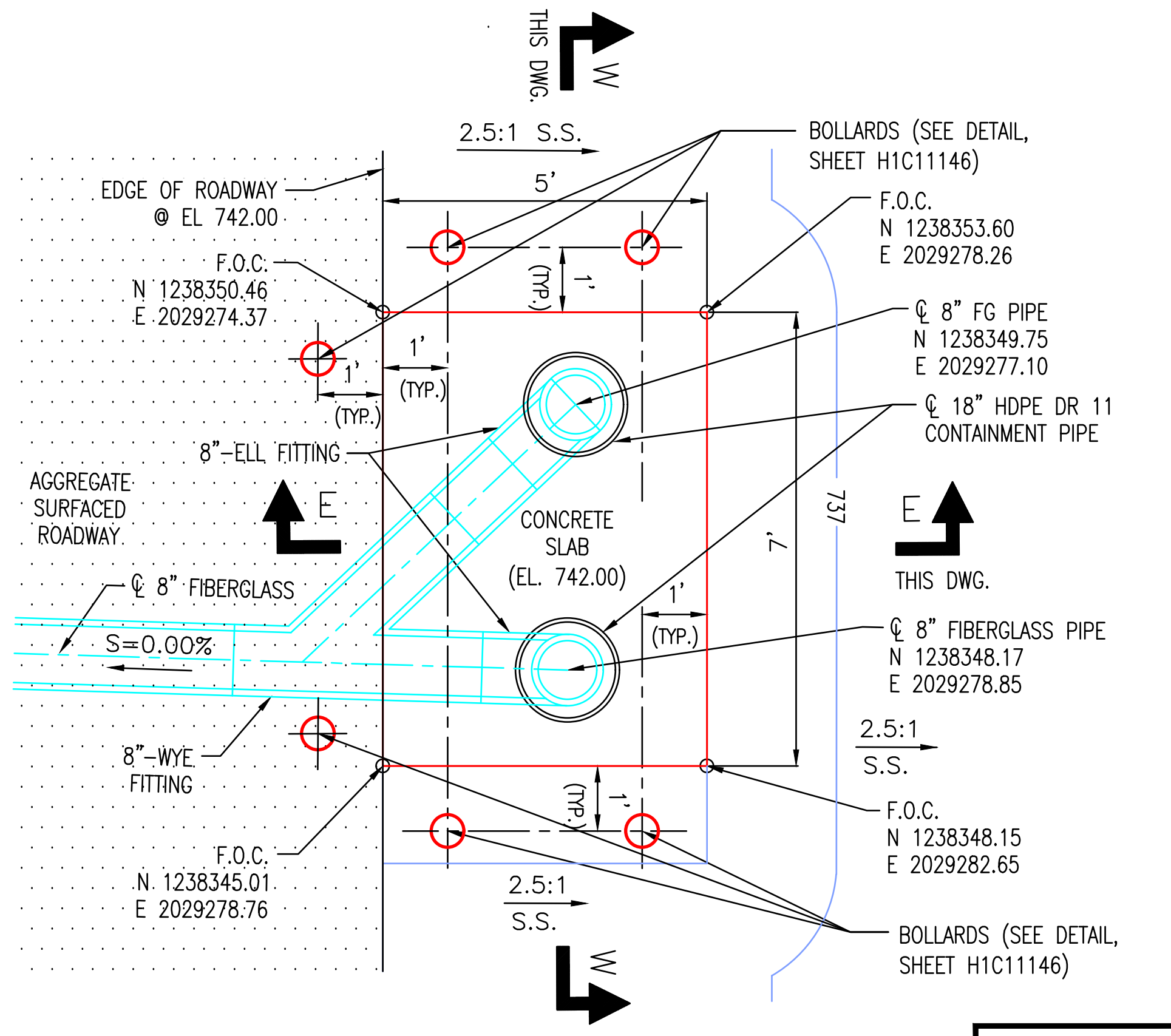
THIS DWG.
W
2.5:1 S.S.
5'
BOLLARDS (SEE DETAIL, SHEET H1C11146)
EDGE OF ROADWAY @ EL 742.00
F.O.C. N 1238350.46 E 2029274.37
F.O.C. N 1238353.60 E 2029278.26
1' (TYP.)
℄ 8" FG PIPE N 1238349.75 E 2029277.10
℄ 18" HDPE DR 11 CONTAINMENT PIPE
8"-ELL FITTING
AGGREGATE SURFACED ROADWAY
E
CONCRETE SLAB (EL. 742.00)
7'
737
E
THIS DWG.
℄ 8" FIBERGLASS
S=0.00%
℄ 8" FIBERGLASS PIPE N 1238348.17 E 2029278.85
8"-WYE FITTING
2.5:1 S.S.
F.O.C. N 1238345.01 E 2029278.76
F.O.C. N 1238348.15 E 2029282.65
BOLLARDS (SEE DETAIL, SHEET H1C11146)
W

LEVEL CONTROLS PAD

NOT TO SCALE

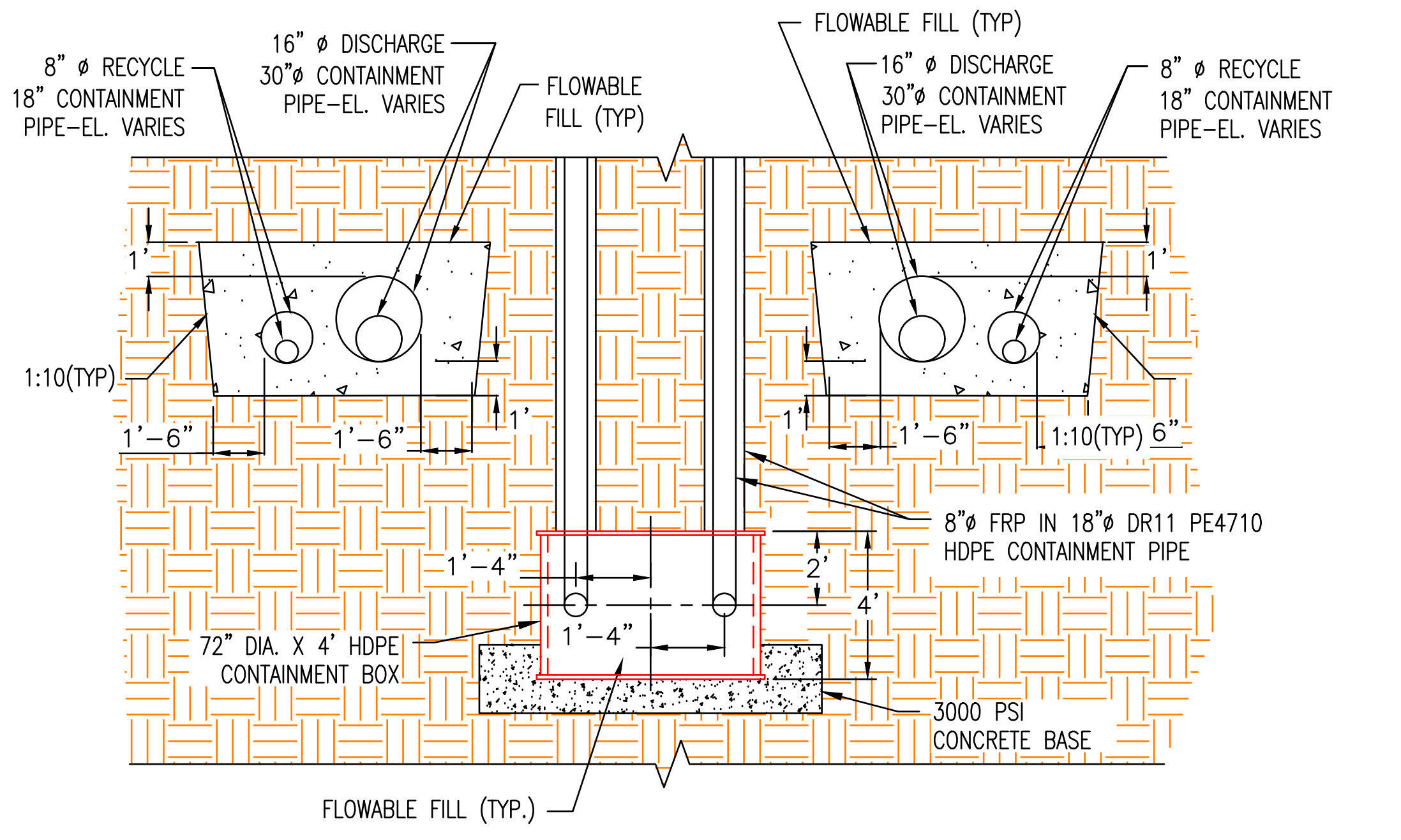
8" ø RECYCLE 18" CONTAINMENT PIPE-EL. VARIES
16" ø DISCHARGE 30"ø CONTAINMENT PIPE-EL. VARIES
FLOWABLE FILL (TYP)
FLOWABLE FILL (TYP)
16" ø DISCHARGE 30"ø CONTAINMENT PIPE-EL. VARIES
8" ø RECYCLE 18" CONTAINMENT PIPE-EL. VARIES
1'
1:10(TYP)
1'-6"
1'-6"
1'
1'
1'-6"
1:10(TYP)
6"
8"ø FRP IN 18"ø DR11 PE4710 HDPE CONTAINMENT PIPE
1'-4"
2'
4'
1'-4"
72" DIA. X 4' HDPE CONTAINMENT BOX
3000 PSI CONCRETE BASE
FLOWABLE FILL (TYP.)

SECTION W-W (THIS SHEET)

NOT TO SCALE

NOTES:

1. ALL EARTHEN STRUCTURES ARE ENGINEERED TO WITHSTAND A HORIZONTAL FORCE OF 0.17G

REFERENCES:

H1C11120	TITLE SHEET AND DRAWING INDEX
H1C11125	CELL NO. 1, SITE DEVELOPMENT, BASE GRADING PLAN
H1C11131	CELL NO. 2 SITE DEVELOPMENT, BASE GRADING PLAN
H1C11133	CELL NO. 3 SITE DEVELOPMENT, BASE GRADING PLAN
H1C11144	CELL NO. 1 THROUGH CELL NO. 3, MISCELLANEOUS DETAILS, SHEET 2
H1C11145	CELL NO. 1 THROUGH CELL NO. 3, MISCELLANEOUS DETAILS, SHEET 3

GEORGIA
DEPARTMENT OF NATURAL RESOURCES
ENVIRONMENTAL PROTECTION DIVISION
Approved
Solid Waste Management Program
Approved By: Keith Stevens Digitally signed by Keith Stevens Date: 2022.10.25 08:59:48 -04'00'

No. 27185 R. GRANT LAKE 9/27/22

9/27/22

REVISION	DATE	REVISION	DATE	REVISION	DATE	REVISION	DATE	REVISION 0	DATE 09-23-2022
								CCR LF PERMIT APPLICATION [BY HHNT, INC.]	

BY	CHK'D	CIVIL APPR	ELECT APPR	I/C APPR	MECH APPR	DISC MGR
ANR	RBL					

Southern Company Generation
Engineering and Construction Services
FOR

Georgia Power Company

PLANT WANSLEY
COAL COMBUSTION BY-PRODUCT DISPOSAL FACILITY
CELL NO. 1 THROUGH CELL NO. 3
MISCELLANEOUS SECTIONS
SHEET 2

SCALE	DRAWING NUMBER	SHEET	CONT'D	REV
AS NOTED	**H1C11139**	1	FINAL	0

Acad2008 ANSI F: 40x28

target ZERO Every day, every job, safely.

TOP EL. 787.10
PIPE INVERT EL. 763.60
CELL 3
208 L.F. 36" DIA. DUAL WALL HDPE PIPE @ 1.98% GR
FLOW
SEE CELL COMPOSITE LINER DETAIL DWG. H1C11144
SEE RISER STRUCTURE PLAN & SECTIONS FOR LINER, CONCRETE BASE, & PIPE ANCHORING DETAILS, DWG. H1C11143
LEACHATE COLLECTION PIPES NOT SHOWN FOR CLARITY SEE DWG H1C11155
CONCRETE HEADWALL, SEE CONCRETE HEADWALL ON SLOPE DETAIL DWG. H1C11145
SEE CELL COMPOSITE LINER, DWG. H1C11144
SEE CELL ANCHOR TRENCH DETAIL DWG. H1C11144
TOPSOIL & GRASS
2
1
20.0'
PERIMETER DIKE
-4.0%
GENERAL STRUCTURAL FILL
TRACKING SURFACE 8" THICK GRADED AGGREGATE BASE
TOPSOIL & GRASS
2.5
1
12" FLOWABLE FILL ABOVE & BELOW PIPE (TYP.)
CONCRETE COLLAR,SEE DETAIL, DWG. H11C11138
℄ M.H.
PRECAST 5' DIA. MANHOLE, SEE GDOT STANDARD DWG. 1011-AP FOR DETAILS
TOP/MH EL. 768.00
INVERT 759.48 (IN)
INVERT 755.59 (OUT)
5'
BENCH
2
1
GRADED STONE 2" TO 10" W/ 2' THICKNESS
SEE PERIMETER DITCH COMPOSITE LINER DETAIL DWG. H1C11144
DITCH BERM TOP ELEV.= 762.00±
H1C11139
EXISTING GROUND
178.2 L.F. 36" DIA. DUAL WALL HDPE PIPE @ 0.50% GR.
12" FLOWABLE FILL ABOVE & BELOW PIPE (TYP.)
℄ 30' ROADWAY
15'
15'
-4.0%
VARIES
VARIES
TRACKING SURFACE 8" THICK GRADED AGGREGATE BASE
FLOW
FLOW
SEE PERIMETER DITCH ANCHOR TRENCH DETAIL DWG. H1C11144
TOP OF HEADWALL, ANCHOR LINER ALONG EACH SIDE OF HEADWALL AND FOLD BACK INTO TRENCH, TERMINATE TRENCH ANCHOR ON EACH SIDE OF 54" DIA. PIPES SEE CONCRETE HEADWALL AT PERIMETER DITCH TYPICAL SECTION DWG. H1C11145
SEE CELL 3 TO CELL 2 DISCHARGE DITCH TYPICAL SECTION DWG H1C11139
PIPE INV EL. 754.70
2
1
PERIMETER DITCH
CONCRETE HEADWALL, SEE CONCRETE HEADWALL ON SLOPE DETAIL DWG. H1C11145
SEE TYPICAL PERIMETER DITCH COMPOSITE LINER W/ STONE COVER DETAIL DWG. H1C11144

RISER STRUCTURE AT CELL 3

1" = 10'
(H1C11133)

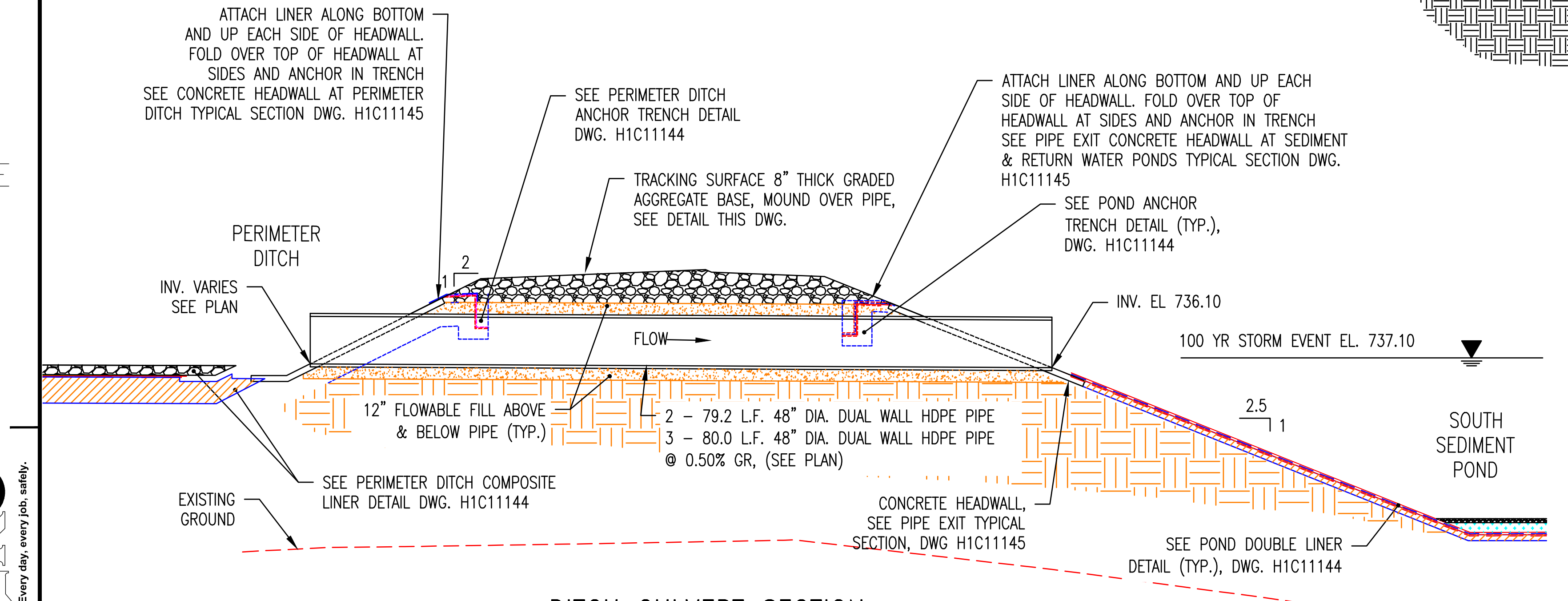
ATTACH LINER ALONG BOTTOM AND UP EACH SIDE OF HEADWALL. FOLD OVER TOP OF HEADWALL AT SIDES AND ANCHOR IN TRENCH SEE CONCRETE HEADWALL AT PERIMETER DITCH TYPICAL SECTION DWG. H1C11145
SEE PERIMETER DITCH ANCHOR TRENCH DETAIL DWG. H1C11144
TRACKING SURFACE 8" THICK GRADED AGGREGATE BASE, MOUND OVER PIPE, SEE DETAIL THIS DWG.
ATTACH LINER ALONG BOTTOM AND UP EACH SIDE OF HEADWALL. FOLD OVER TOP OF HEADWALL AT SIDES AND ANCHOR IN TRENCH SEE PIPE EXIT CONCRETE HEADWALL AT SEDIMENT & RETURN WATER PONDS TYPICAL SECTION DWG. H1C11145
SEE POND ANCHOR TRENCH DETAIL (TYP.), DWG. H1C11144
PERIMETER DITCH
INV. VARIES SEE PLAN
2
1
FLOW
INV. EL 736.10
100 YR STORM EVENT EL. 737.10
12" FLOWABLE FILL ABOVE & BELOW PIPE (TYP.)
2 – 79.2 L.F. 48" DIA. DUAL WALL HDPE PIPE
3 – 80.0 L.F. 48" DIA. DUAL WALL HDPE PIPE @ 0.50% GR, (SEE PLAN)
2.5
1
SOUTH SEDIMENT POND
SEE PERIMETER DITCH COMPOSITE LINER DETAIL DWG. H1C11144
EXISTING GROUND
CONCRETE HEADWALL, SEE PIPE EXIT TYPICAL SECTION, DWG H1C11145
SEE POND DOUBLE LINER DETAIL (TYP.), DWG. H1C11144

DITCH CULVERT SECTION
CELL 1

1" = 10'
(H1C11125)

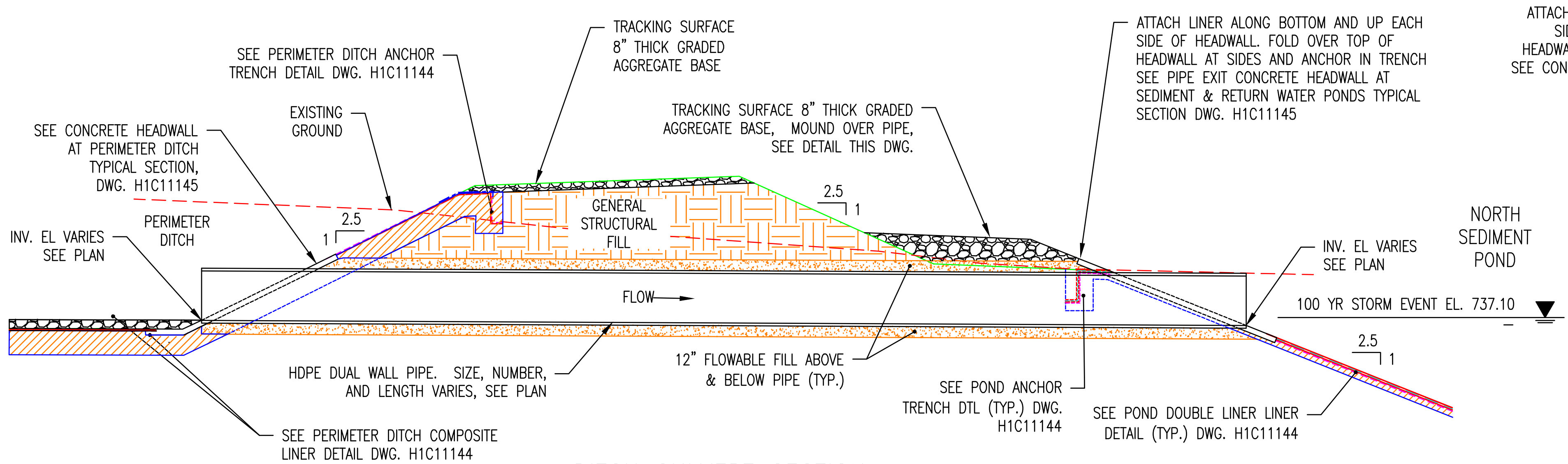
SEE PERIMETER DITCH ANCHOR TRENCH DETAIL DWG. H1C11144
TRACKING SURFACE 8" THICK GRADED AGGREGATE BASE
SEE CONCRETE HEADWALL AT PERIMETER DITCH TYPICAL SECTION, DWG. H1C11145
EXISTING GROUND
TRACKING SURFACE 8" THICK GRADED AGGREGATE BASE, MOUND OVER PIPE, SEE DETAIL THIS DWG.
ATTACH LINER ALONG BOTTOM AND UP EACH SIDE OF HEADWALL. FOLD OVER TOP OF HEADWALL AT SIDES AND ANCHOR IN TRENCH SEE PIPE EXIT CONCRETE HEADWALL AT SEDIMENT & RETURN WATER PONDS TYPICAL SECTION DWG. H1C11145
INV. EL VARIES SEE PLAN
PERIMETER DITCH
2.5
1
GENERAL STRUCTURAL FILL
2.5
1
FLOW
INV. EL VARIES SEE PLAN
NORTH SEDIMENT POND
100 YR STORM EVENT EL. 737.10
2.5
1
HDPE DUAL WALL PIPE. SIZE, NUMBER, AND LENGTH VARIES, SEE PLAN
12" FLOWABLE FILL ABOVE & BELOW PIPE (TYP.)
SEE POND ANCHOR TRENCH DTL (TYP.) DWG. H1C11144
SEE POND DOUBLE LINER LINER DETAIL (TYP.) DWG. H1C11144
SEE PERIMETER DITCH COMPOSITE LINER DETAIL DWG. H1C11144

DITCH CULVERT SECTION
CELL 2

1" = 10'
(H1C11131)

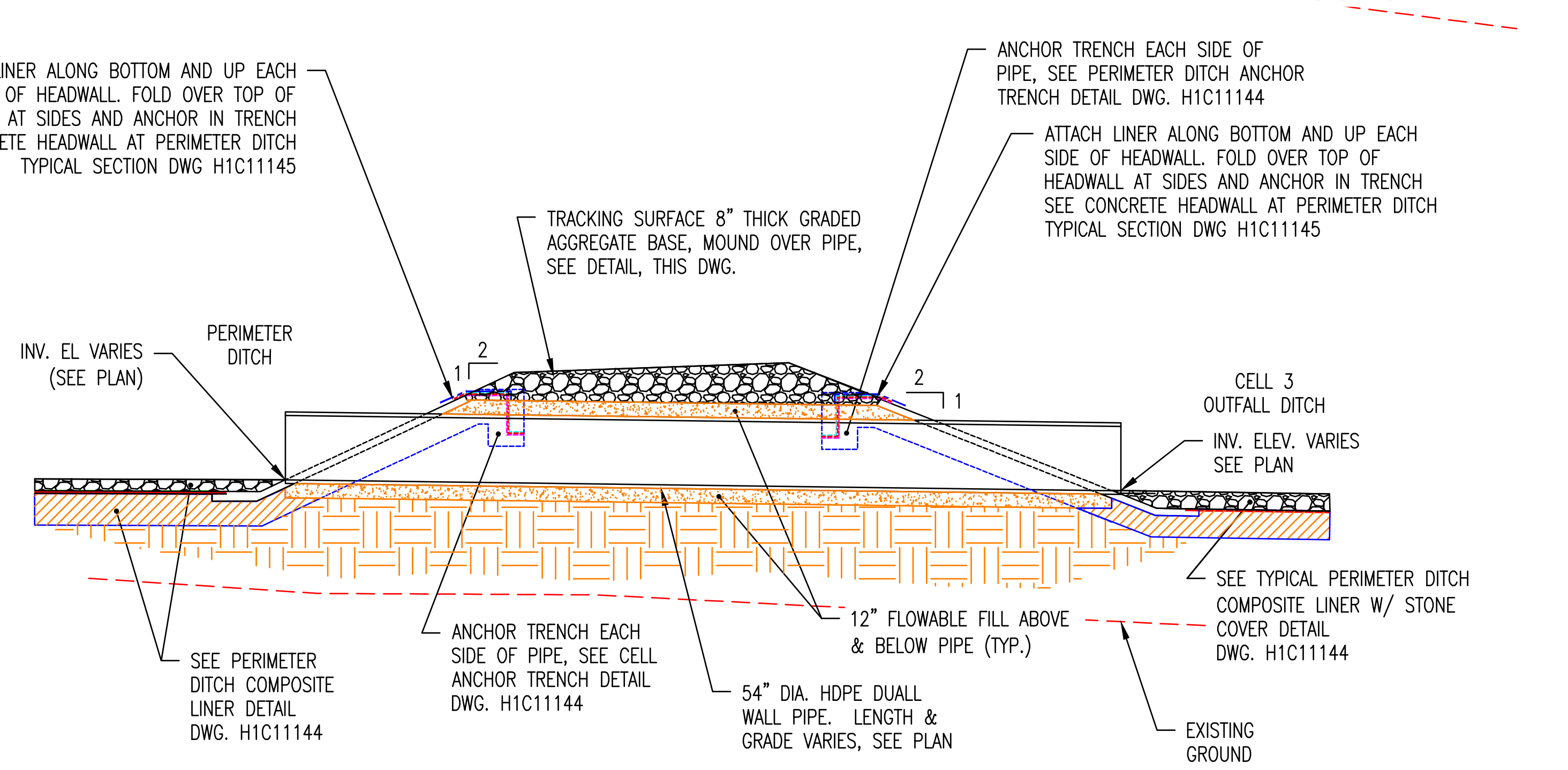
ATTACH LINER ALONG BOTTOM AND UP EACH SIDE OF HEADWALL. FOLD OVER TOP OF HEADWALL AT SIDES AND ANCHOR IN TRENCH SEE CONCRETE HEADWALL AT PERIMETER DITCH TYPICAL SECTION DWG H1C11145
ANCHOR TRENCH EACH SIDE OF PIPE, SEE PERIMETER DITCH ANCHOR TRENCH DETAIL DWG. H1C11144
ATTACH LINER ALONG BOTTOM AND UP EACH SIDE OF HEADWALL. FOLD OVER TOP OF HEADWALL AT SIDES AND ANCHOR IN TRENCH SEE CONCRETE HEADWALL AT PERIMETER DITCH TYPICAL SECTION DWG H1C11145
TRACKING SURFACE 8" THICK GRADED AGGREGATE BASE, MOUND OVER PIPE, SEE DETAIL, THIS DWG.
INV. EL VARIES (SEE PLAN)
PERIMETER DITCH
2
1
2
1
CELL 3 OUTFALL DITCH
INV. ELEV. VARIES SEE PLAN
SEE TYPICAL PERIMETER DITCH COMPOSITE LINER W/ STONE COVER DETAIL DWG. H1C11144
12" FLOWABLE FILL ABOVE & BELOW PIPE (TYP.)
SEE PERIMETER DITCH COMPOSITE LINER DETAIL DWG. H1C11144
ANCHOR TRENCH EACH SIDE OF PIPE, SEE CELL ANCHOR TRENCH DETAIL DWG. H1C11144
54" DIA. HDPE DUALL WALL PIPE. LENGTH & GRADE VARIES, SEE PLAN
EXISTING GROUND

DITCH CULVERT SECTION
CELL 3

1" = 10'
(H1C11133)

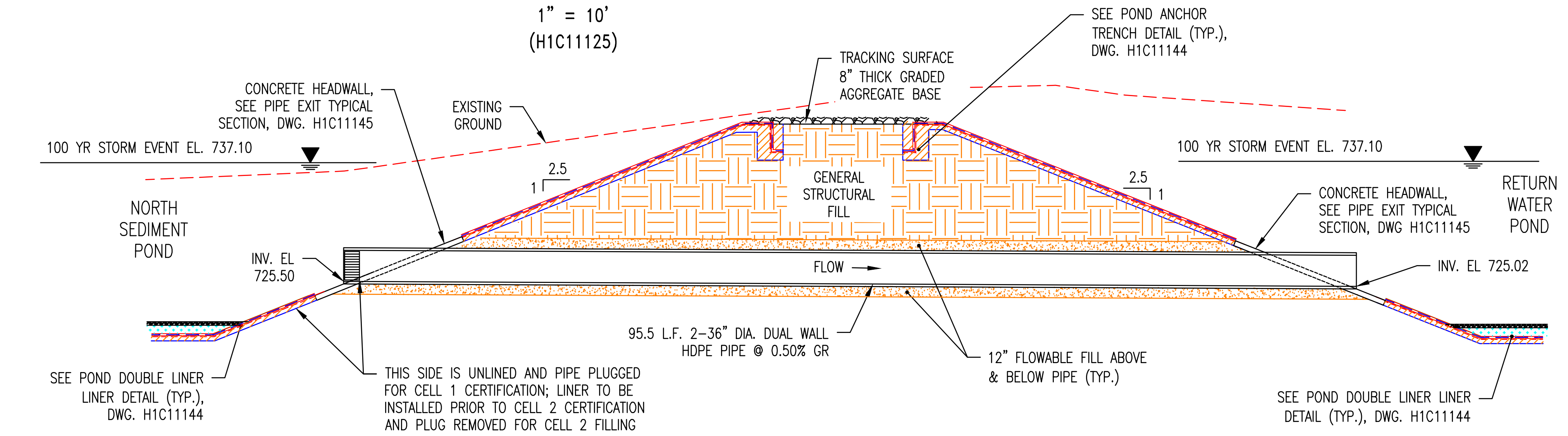
CONCRETE HEADWALL, SEE PIPE EXIT TYPICAL SECTION, DWG. H1C11145
EXISTING GROUND
TRACKING SURFACE 8" THICK GRADED AGGREGATE BASE
SEE POND ANCHOR TRENCH DETAIL (TYP.), DWG. H1C11144
100 YR STORM EVENT EL. 737.10
2.5
1
GENERAL STRUCTURAL FILL
2.5
1
100 YR STORM EVENT EL. 737.10
NORTH SEDIMENT POND
INV. EL 725.50
FLOW
CONCRETE HEADWALL, SEE PIPE EXIT TYPICAL SECTION, DWG H1C11145
RETURN WATER POND
INV. EL 725.02
95.5 L.F. 2–36" DIA. DUAL WALL HDPE PIPE @ 0.50% GR
12" FLOWABLE FILL ABOVE & BELOW PIPE (TYP.)
SEE POND DOUBLE LINER LINER DETAIL (TYP.), DWG. H1C11144
THIS SIDE IS UNLINED AND PIPE PLUGGED FOR CELL 1 CERTIFICATION; LINER TO BE INSTALLED PRIOR TO CELL 2 CERTIFICATION AND PLUG REMOVED FOR CELL 2 FILLING OPERATIONS.
SEE POND DOUBLE LINER LINER DETAIL (TYP.), DWG. H1C11144

CULVERT SECTION
NORTH SED POND TO RETURN WATER POND

1" = 10'
(H1C11126 & H1C11131)

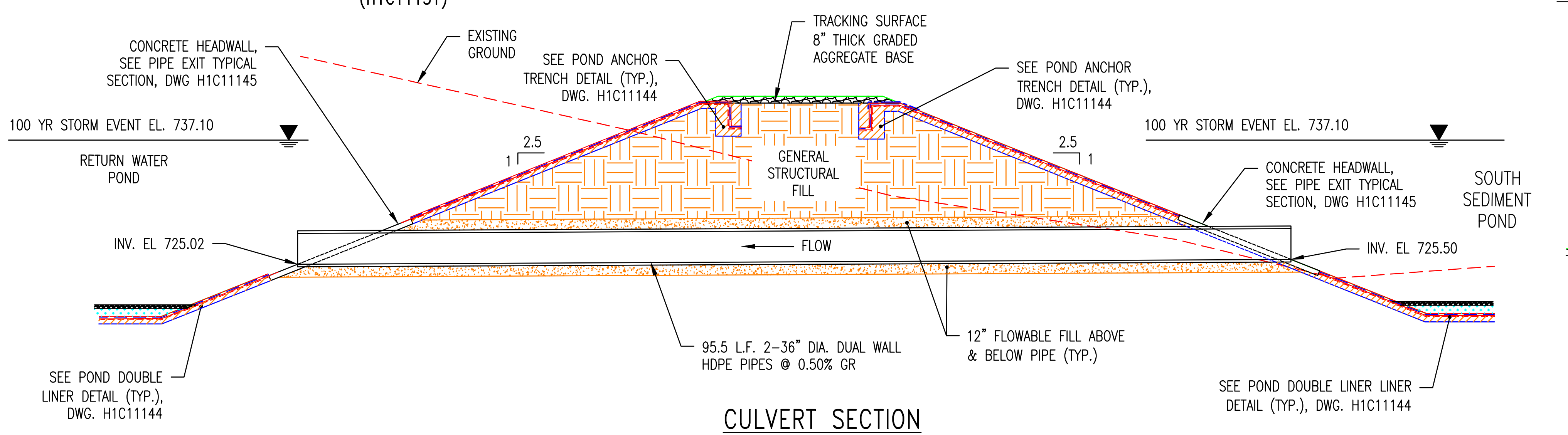
CONCRETE HEADWALL, SEE PIPE EXIT TYPICAL SECTION, DWG H1C11145
EXISTING GROUND
SEE POND ANCHOR TRENCH DETAIL (TYP.), DWG. H1C11144
TRACKING SURFACE 8" THICK GRADED AGGREGATE BASE
SEE POND ANCHOR TRENCH DETAIL (TYP.), DWG. H1C11144
100 YR STORM EVENT EL. 737.10
RETURN WATER POND
2.5
1
GENERAL STRUCTURAL FILL
2.5
1
100 YR STORM EVENT EL. 737.10
CONCRETE HEADWALL, SEE PIPE EXIT TYPICAL SECTION, DWG H1C11145
SOUTH SEDIMENT POND
INV. EL 725.02
FLOW
INV. EL 725.50
95.5 L.F. 2–36" DIA. DUAL WALL HDPE PIPES @ 0.50% GR
12" FLOWABLE FILL ABOVE & BELOW PIPE (TYP.)
SEE POND DOUBLE LINER DETAIL (TYP.), DWG. H1C11144
SEE POND DOUBLE LINER LINER DETAIL (TYP.), DWG. H1C11144

CULVERT SECTION
SOUTH SED POND TO RETURN WATER POND

1" = 10'
(H1C11125)

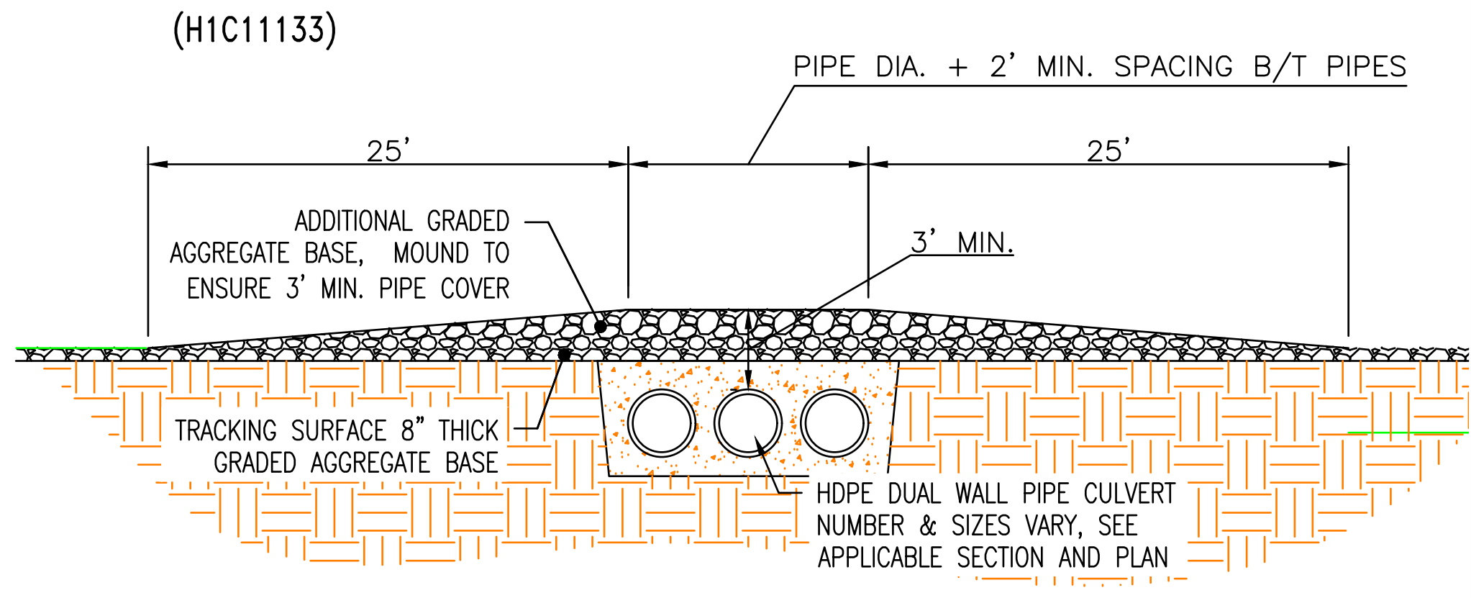
PIPE DIA. + 2' MIN. SPACING B/T PIPES
25'
25'
ADDITIONAL GRADED AGGREGATE BASE, MOUND TO ENSURE 3' MIN. PIPE COVER
3' MIN.
TRACKING SURFACE 8" THICK GRADED AGGREGATE BASE
HDPE DUAL WALL PIPE CULVERT NUMBER & SIZES VARY, SEE APPLICABLE SECTION AND PLAN

MOUND OVER PIPE DETAIL

1" = 10'
(H1C11139)

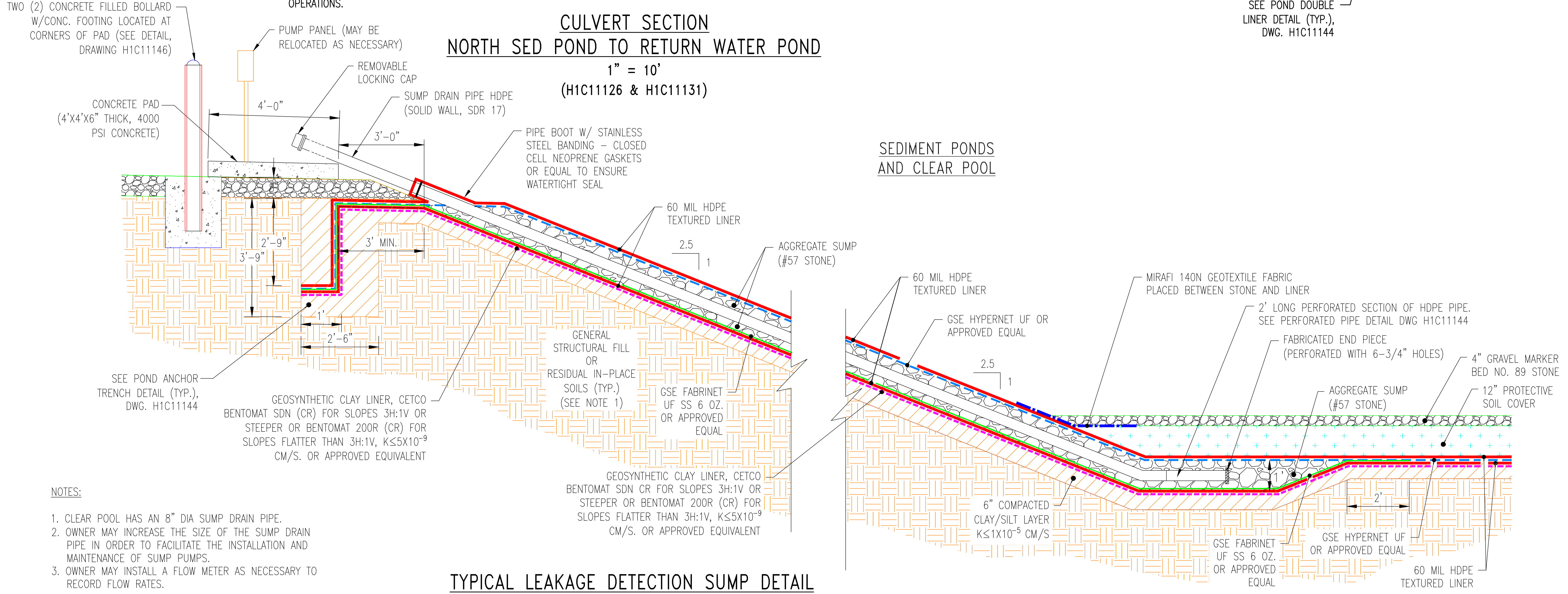
TWO (2) CONCRETE FILLED BOLLARD W/CONC. FOOTING LOCATED AT CORNERS OF PAD (SEE DETAIL, DRAWING H1C11146)
PUMP PANEL (MAY BE RELOCATED AS NECESSARY)
REMOVABLE LOCKING CAP
SUMP DRAIN PIPE HDPE (SOLID WALL, SDR 17)
CONCRETE PAD (4'X4'X6" THICK, 4000 PSI CONCRETE)
4'-0"
3'-0"
PIPE BOOT W/ STAINLESS STEEL BANDING – CLOSED CELL NEOPRENE GASKETS OR EQUAL TO ENSURE WATERTIGHT SEAL
2'-9"
3'-9"
3' MIN.
1'
2'-6"
60 MIL HDPE TEXTURED LINER
2.5
1
AGGREGATE SUMP (#57 STONE)
SEE POND ANCHOR TRENCH DETAIL (TYP.), DWG. H1C11144
GENERAL STRUCTURAL FILL OR RESIDUAL IN-PLACE SOILS (TYP.) (SEE NOTE 1)
GSE FABRINET UF SS 6 OZ. OR APPROVED EQUAL
GEOSYNTHETIC CLAY LINER, CETCO BENTOMAT SDN (CR) FOR SLOPES 3H:1V OR STEEPER OR BENTOMAT 200R (CR) FOR SLOPES FLATTER THAN 3H:1V, K≤5X10⁻⁹ CM/S. OR APPROVED EQUIVALENT
GEOSYNTHETIC CLAY LINER, CETCO BENTOMAT SDN CR FOR SLOPES 3H:1V OR STEEPER OR BENTOMAT 200R (CR) FOR SLOPES FLATTER THAN 3H:1V, K≤5X10⁻⁹ CM/S. OR APPROVED EQUIVALENT
SEDIMENT PONDS AND CLEAR POOL
60 MIL HDPE TEXTURED LINER
GSE HYPERNET UF OR APPROVED EQUAL
2.5
1
MIRAFI 140N GEOTEXTILE FABRIC PLACED BETWEEN STONE AND LINER
2' LONG PERFORATED SECTION OF HDPE PIPE. SEE PERFORATED PIPE DETAIL DWG H1C11144
FABRICATED END PIECE (PERFORATED WITH 6-3/4" HOLES)
4" GRAVEL MARKER BED NO. 89 STONE
12" PROTECTIVE SOIL COVER
AGGREGATE SUMP (#57 STONE)
1'
2'
6" COMPACTED CLAY/SILT LAYER K≤1X10⁻⁵ CM/S
GSE FABRINET UF SS 6 OZ. OR APPROVED EQUAL
GSE HYPERNET UF OR APPROVED EQUAL
60 MIL HDPE TEXTURED LINER

NOTES:

1. CLEAR POOL HAS AN 8" DIA SUMP DRAIN PIPE.
2. OWNER MAY INCREASE THE SIZE OF THE SUMP DRAIN PIPE IN ORDER TO FACILITATE THE INSTALLATION AND MAINTENANCE OF SUMP PUMPS.
3. OWNER MAY INSTALL A FLOW METER AS NECESSARY TO RECORD FLOW RATES.

TYPICAL LEAKAGE DETECTION SUMP DETAIL

N.T.S.
(H1C11125 & H1C11131)

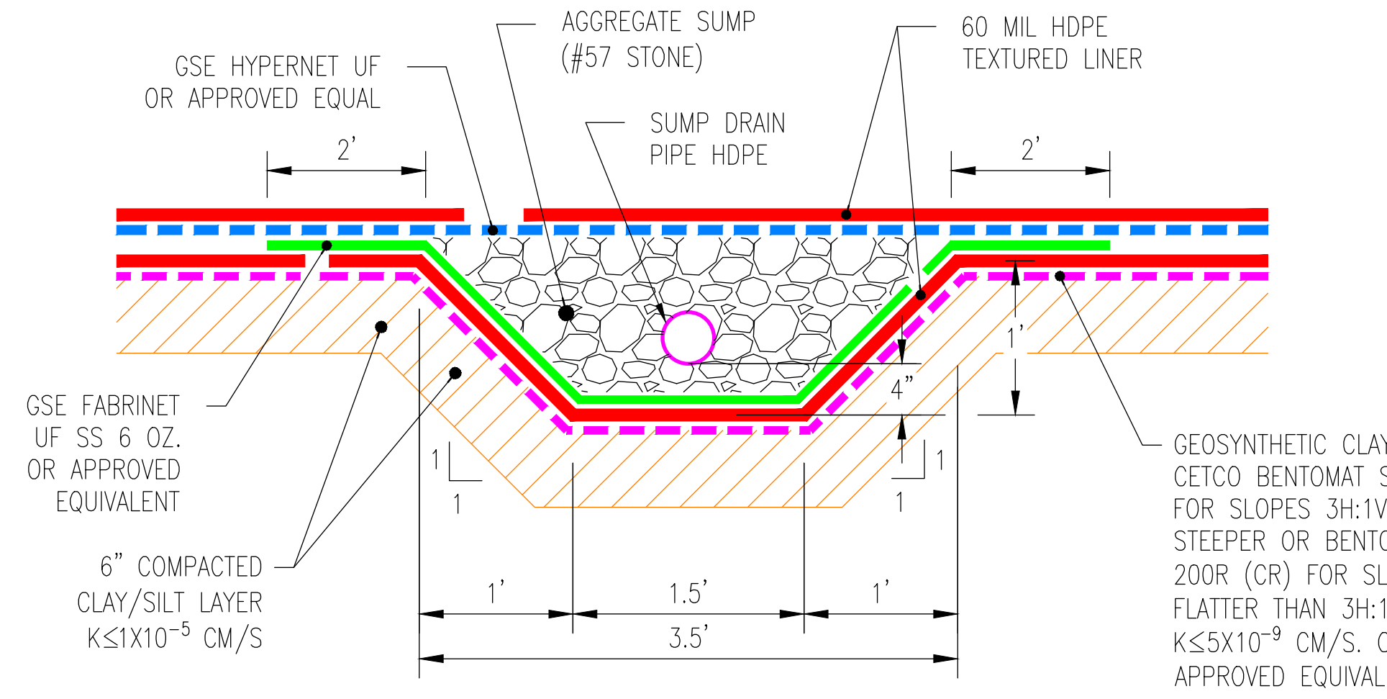
GSE HYPERNET UF OR APPROVED EQUAL
AGGREGATE SUMP (#57 STONE)
SUMP DRAIN PIPE HDPE
60 MIL HDPE TEXTURED LINER
2'
2'
GSE FABRINET UF SS 6 OZ. OR APPROVED EQUIVALENT
6" COMPACTED CLAY/SILT LAYER K≤1X10⁻⁵ CM/S
1'
4"
1
1
1
1
1'
1.5'
1'
3.5'
GEOSYNTHETIC CLAY LINER, CETCO BENTOMAT SDN CR FOR SLOPES 3H:1V OR STEEPER OR BENTOMAT 200R (CR) FOR SLOPES FLATTER THAN 3H:1V, K≤5X10⁻⁹ CM/S. OR APPROVED EQUIVALENT

TYPICAL LEAKAGE DETECTION
SUMP DRAIN PIPE DETAIL

N.T.S.

GEORGIA DEPARTMENT OF NATURAL RESOURCES
ENVIRONMENTAL PROTECTION DIVISION
Approved
Solid Waste Management Program
Approved By: Keith Stevens Digitally signed by Keith Stevens Date: 2022.10.25 08:59:48 -04'00'

NO. 27185 R. BRANT LAKE 9/27/22

9/27/22

NOTES:

1. THE SECTIONS SHOWN ON THIS DRAWING REPRESENT TYPICAL CONFIGURATIONS FOR THE CELLS, PERIMETER DITCHES, LEACHATE COLLECTION SYSTEM, AND SEDIMENT BASIN. ACTUAL CONDITIONS WILL VARY TO INCLUDE BOTH CUT AND FILL AREAS, THEREFORE THE SUBGRADE MATERIAL FOR THE CLAY LINER COULD CONSIST OF EITHER RESIDUAL, IN-PLACE SOILS OR GENERAL STRUCTURAL FILL. REFERENCE THE CONSTRUCTION SPECIFICATIONS FOR PROOF-ROLLING CRITERIA FOR IN-PLACE SOILS AND THE PLACEMENT AND COMPACTION CRITERIA FOR GENERAL STRUCTURAL FILL.

REFERENCES:

H1C11120	TITLE SHEET AND DRAWING INDEX
H1C11125	CELL NO. 1, SITE DEVELOPMENT, BASE GRADING PLAN
H1C11126	CELL NO. 2, SITE DEVELOPMENT, ROUGH GRADE/BORROW PLAN
H1C11131	CELL NO. 2 SITE DEVELOPMENT, BASE GRADING PLAN
H1C11133	CELL NO. 3 SITE DEVELOPMENT, BASE GRADING PLAN
H1C11145	CELL NO.1 THROUGH CELL NO. 3 MISCELLANEOUS SECTIONS, SHEET 3

Southern Company Services, Inc.

Southern Company Generation
Engineering and Construction Services
FOR
Georgia Power Company

PLANT WANSLEY
COAL COMBUSTION RESIDUALS (CCR) LANDFILL
CELL 1 THROUGH CELL 3
MISCELLANEOUS SECTIONS
SHEET 3

REVISION	DATE	BY	CHK'D	CIVIL APPR	ELECT APPR	I/C APPR	MECH APPR	DISC MGR
0 CCR LF PERMIT APPLICATION [BY HHNT, INC.]	09-23-2022	ANR	RBL		☒	☒	☒	☒

SCALE	DRAWING NUMBER	SHEET	CONT'D	REV
AS NOTED	H1C11140	1	FINAL	0

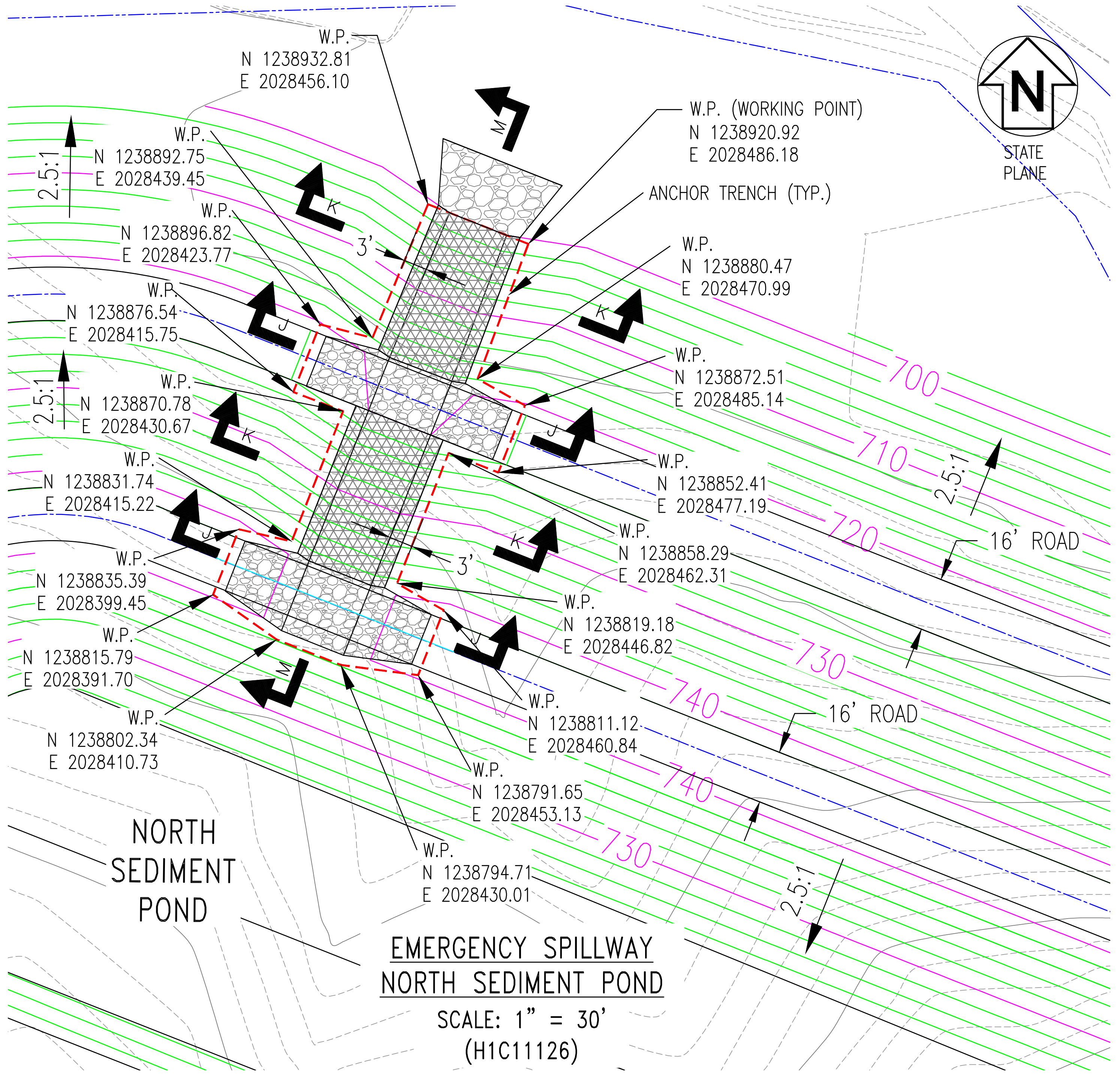
W.P.
N 1238932.81
E 2028456.10
W.P. (WORKING POINT)
N 1238920.92
E 2028486.18
ANCHOR TRENCH (TYP.)
W.P.
N 1238892.75
E 2028439.45
W.P.
N 1238896.82
E 2028423.77
W.P.
N 1238880.47
E 2028470.99
W.P.
N 1238876.54
E 2028415.75
W.P.
N 1238872.51
E 2028485.14
W.P.
N 1238870.78
E 2028430.67
W.P.
N 1238852.41
E 2028477.19
W.P.
N 1238831.74
E 2028415.22
W.P.
N 1238858.29
E 2028462.31
W.P.
N 1238835.39
E 2028399.45
W.P.
N 1238819.18
E 2028446.82
W.P.
N 1238815.79
E 2028391.70
W.P.
N 1238811.12
E 2028460.84
W.P.
N 1238802.34
E 2028410.73
W.P.
N 1238791.65
E 2028453.13
W.P.
N 1238794.71
E 2028430.01
2.5:1
2.5:1
2.5:1
2.5:1
3'
3'
16' ROAD
16' ROAD
700
710
720
730
740
740
730
M
K
J
STATE PLANE
N
NORTH SEDIMENT POND

EMERGENCY SPILLWAY
NORTH SEDIMENT POND
SCALE: 1" = 30'
(H1C11126)

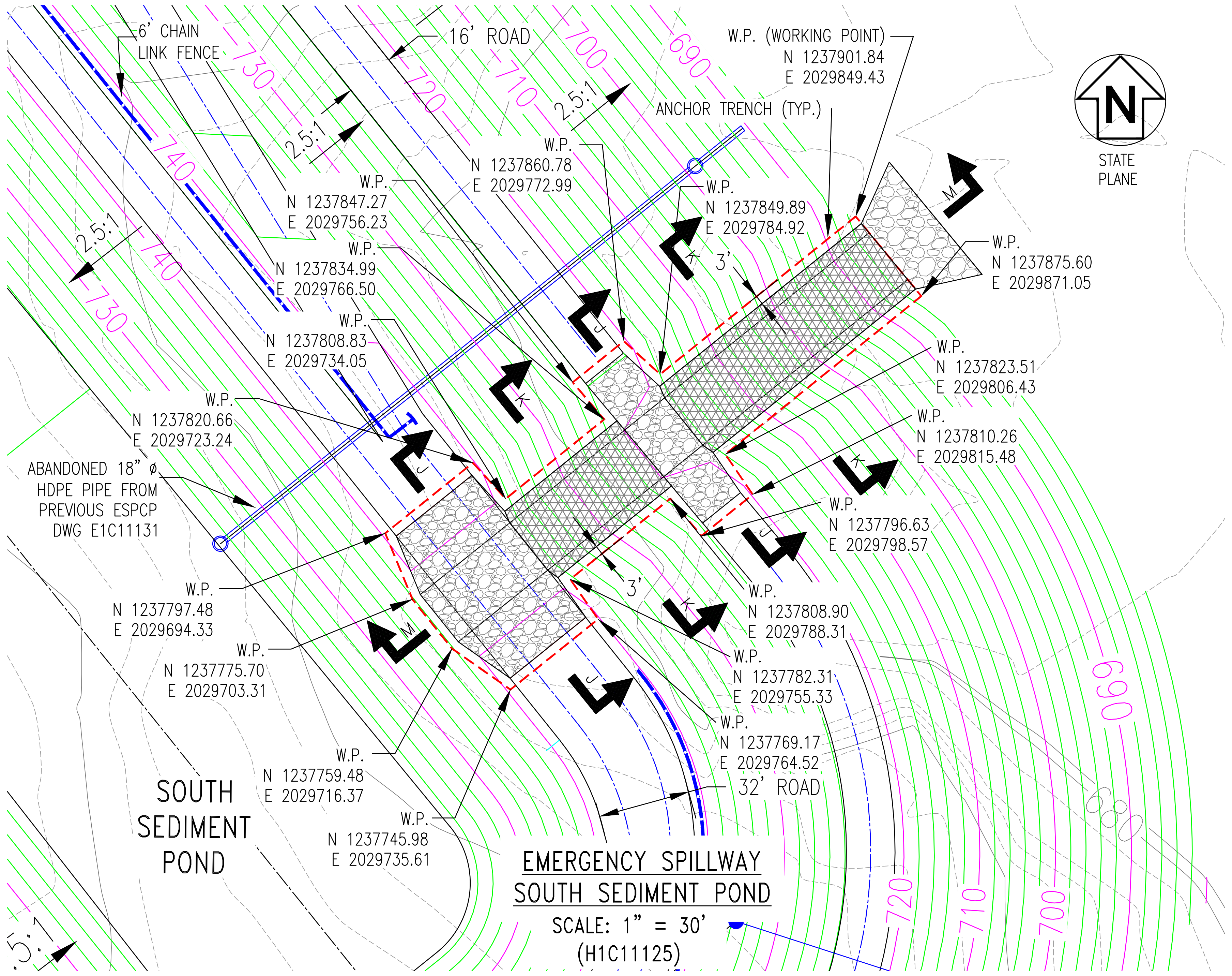
6' CHAIN LINK FENCE
16' ROAD
W.P. (WORKING POINT)
N 1237901.84
E 2029849.43
ANCHOR TRENCH (TYP.)
W.P.
N 1237860.78
E 2029772.99
W.P.
N 1237847.27
E 2029756.23
W.P.
N 1237849.89
E 2029784.92
W.P.
N 1237875.60
E 2029871.05
W.P.
N 1237834.99
E 2029766.50
W.P.
N 1237808.83
E 2029734.05
W.P.
N 1237823.51
E 2029806.43
W.P.
N 1237810.26
E 2029815.48
W.P.
N 1237820.66
E 2029723.24
W.P.
N 1237796.63
E 2029798.57
ABANDONED 18" ø HDPE PIPE FROM PREVIOUS ESPCP DWG E1C11131
W.P.
N 1237808.90
E 2029788.31
W.P.
N 1237797.48
E 2029694.33
W.P.
N 1237782.31
E 2029755.33
W.P.
N 1237775.70
E 2029703.31
W.P.
N 1237769.17
E 2029764.52
W.P.
N 1237759.48
E 2029716.37
32' ROAD
W.P.
N 1237745.98
E 2029735.61
2.5:1
2.5:1
2.5:1
2.5:1
3'
3'
690
700
710
720
730
740
740
730
690
680
720
710
700
M
K
J
STATE PLANE
N
SOUTH SEDIMENT POND

EMERGENCY SPILLWAY
SOUTH SEDIMENT POND
SCALE: 1" = 30'
(H1C11125)

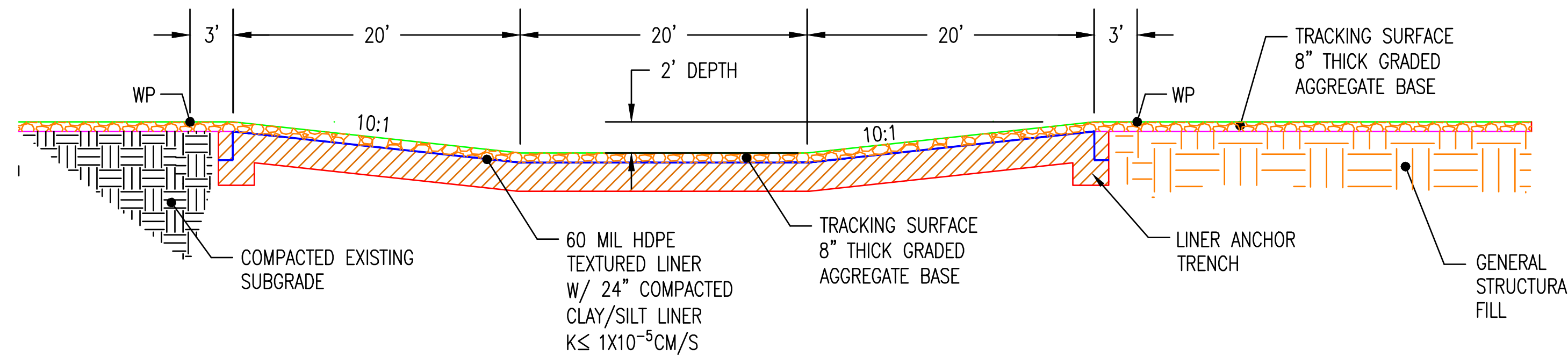
3'
20'
20'
20'
3'
2' DEPTH
WP
WP
10:1
10:1
TRACKING SURFACE 8" THICK GRADED AGGREGATE BASE
COMPACTED EXISTING SUBGRADE
60 MIL HDPE TEXTURED LINER W/ 24" COMPACTED CLAY/SILT LINER K≤ 1X10⁻⁵CM/S
TRACKING SURFACE 8" THICK GRADED AGGREGATE BASE
LINER ANCHOR TRENCH
GENERAL STRUCTURAL FILL

SECTION J–J
EMERGENCY SPILLWAY SECTION TYPICAL ROAD CROSSING
NOT TO SCALE
(H1C11125 & H1C11126)

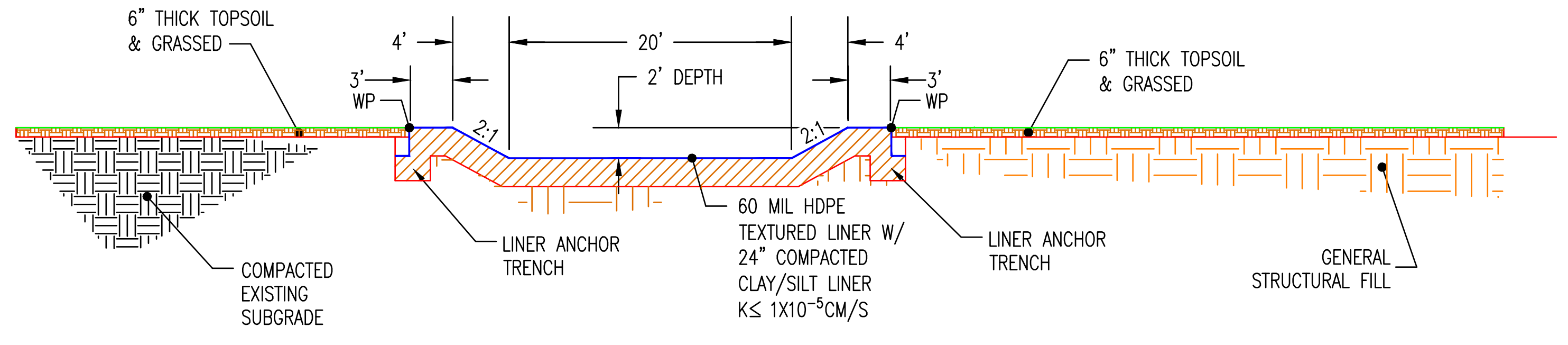
6" THICK TOPSOIL & GRASSED
4'
20'
4'
3'
WP
2' DEPTH
3'
WP
2:1
2:1
6" THICK TOPSOIL & GRASSED
COMPACTED EXISTING SUBGRADE
LINER ANCHOR TRENCH
60 MIL HDPE TEXTURED LINER W/ 24" COMPACTED CLAY/SILT LINER K≤ 1X10⁻⁵CM/S
LINER ANCHOR TRENCH
GENERAL STRUCTURAL FILL

SECTION K–K
EMERGENCY SPILLWAY SEDIMENT POND TYPICAL SECTION ON SLOPE
NOT TO SCALE
(H1C11125 & H1C11126)

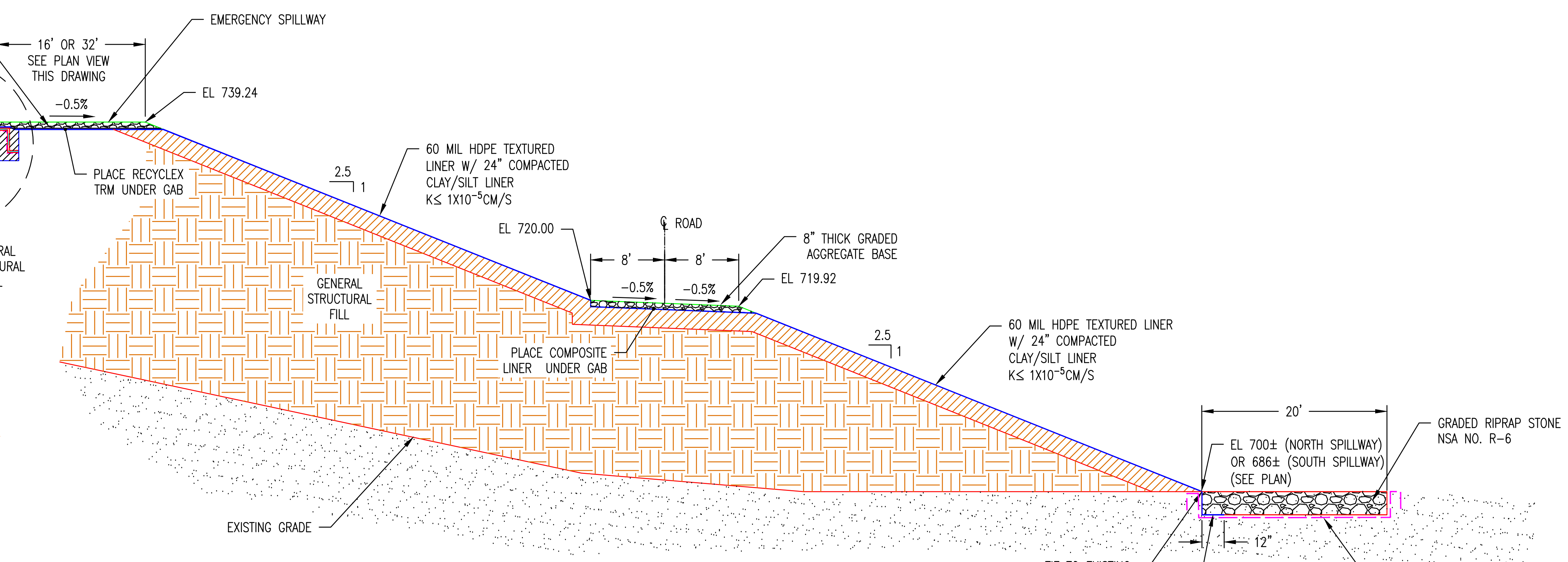
TRACKING SURFACE 8" THICK GRADED AGGREGATE BASE
16' OR 32' SEE PLAN VIEW THIS DRAWING
EMERGENCY SPILLWAY
SEDIMENT POND
EL 741.36
−0.5%
EL 739.24
2.5
1
PLACE RECYCLEX TRM UNDER GAB
SEE ANCHOR TRENCH INSET
GENERAL STRUCTURAL FILL
2.5
1
60 MIL HDPE TEXTURED LINER W/ 24" COMPACTED CLAY/SILT LINER K≤ 1X10⁻⁵CM/S
EL 720.00
℄ ROAD
8'
8'
−0.5%
−0.5%
8" THICK GRADED AGGREGATE BASE
EL 719.92
GENERAL STRUCTURAL FILL
PLACE COMPOSITE LINER UNDER GAB
2.5
1
60 MIL HDPE TEXTURED LINER W/ 24" COMPACTED CLAY/SILT LINER K≤ 1X10⁻⁵CM/S
20'
EL 700± (NORTH SPILLWAY) OR 686± (SOUTH SPILLWAY) (SEE PLAN)
GRADED RIPRAP STONE NSA NO. R–6
EXISTING GRADE
TIE TO EXISTING GROUND
12"
EXTEND RECYCLEX TRM 12" UNDER RIPRAP
GEOTEXTILE FABRIC UNDER RIPRAP STONE, US–380NW OR GEOTEX 1601

SECTION M–M
NORTH & SOUTH SEDIMENTATION POND SPILLWAYS
NOT TO SCALE

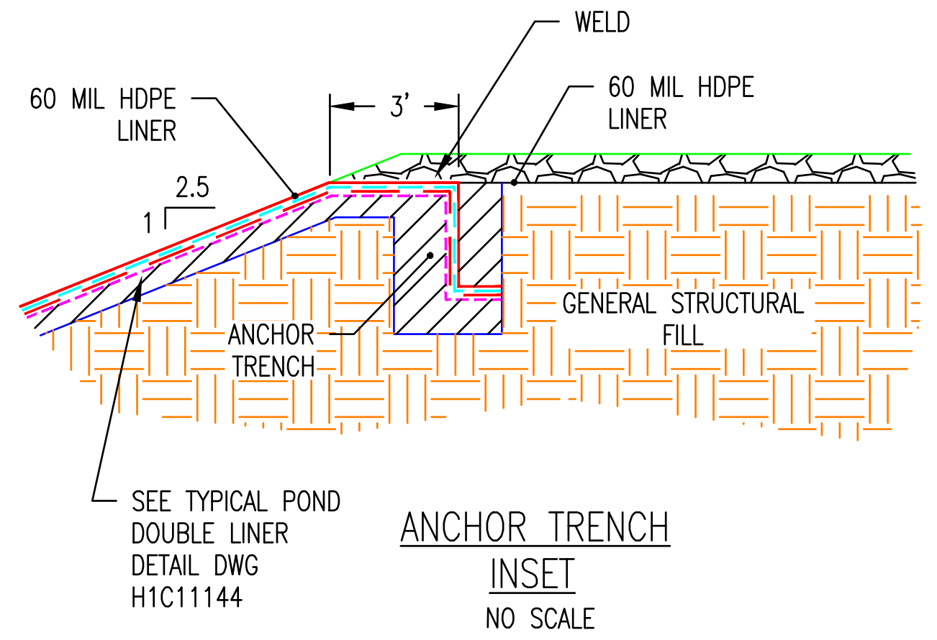
WELD
60 MIL HDPE LINER
3'
60 MIL HDPE LINER
2.5
1
ANCHOR TRENCH
GENERAL STRUCTURAL FILL
SEE TYPICAL POND DOUBLE LINER DETAIL DWG H1C11144

ANCHOR TRENCH
INSET
NO SCALE

GEORGIA
DEPARTMENT OF NATURAL RESOURCES
ENVIRONMENTAL PROTECTION DIVISION
Approved
Solid Waste Management Program
Approved By: Keith Stevens
Digitally signed by Keith Stevens
Date: 2022.10.25 08:59:48 -04'00'

NO. 27185
R. BRANT LANE
9/27/22

GARY W. McWHORTER
9/29/22

REFERENCES:

H1C11120	TITLE SHEET AND DRAWING INDEX
H1C11124	GENERAL SITE DEVELOPMENT, CELL LAYOUT
H1C11125	CELL NO. 1, SITE DEVELOPMENT, BASE GRADING PLAN
H1C11126	CELL NO. 2, SITE DEVELOPMENT, ROUGH GRADE/BORROW PLAN
H1C11131	CELL NO. 2 SITE DEVELOPMENT, BASE GRADING PLAN
H1C11144	CELL NO. 1 THROUGH CELL NO. 3, MISCELLANEOUS DETAILS, SHEET 2
H1C11146	CELL NO. 1 THROUGH CELL NO. 3, MISCELLANEOUS SECTIONS AND DETAILS, SHEET 1

Southern Company Services, Inc.

Southern Company Generation
Engineering and Construction Services
FOR
Georgia Power Company

PLANT WANSLEY
COAL COMBUSTION BY–PRODUCT DISPOSAL FACILITY
CELL NO. 1 AND CELL NO. 2
SEDIMENT POND SPILLWAY SECTIONS AND DETAILS

REVISION	DATE
REVISION 0	DATE 09-23-2022
CCR LF PERMIT APPLICATION [BY HHNT, INC.]	

BY	CHK'D	CIVIL APPR	ELECT APPR	I/C APPR	MECH APPR	DISC MGR
ANR	RBL					

SCALE	DRAWING NUMBER	SHEET	CONT'D	REV
N.T.S.	H1C11141	1	FINAL	0

Acad2004 ANSI F: 40x28

PLANT WANSLEY COAL COMBUSTION BY-PRODUCT DISPOSAL FACILITY DESCRIPTION OF GENERAL CELL FILLING OPERATIONS

1. THE FOLLOWING PROCEDURES SHALL BE FOLLOWED FOR UTILIZATION OF ANY TEMPORARY CONTAINMENT BASINS LOCATED ELSEWHERE WITHIN THE DISPOSAL CELL. THE LOCATION AND USE OF SUCH TEMPORARY CONTAINMENT BASINS SHALL BE SUBJECT TO THE APPROVAL OF THE PURCHASER AND ENGINEERING & CONSTRUCTION SERVICES, SOUTHERN COMPANY SERVICES, INC.
2. THE INITIAL RIM DITCH WILL BE CONSTRUCTED FROM DRY GYPSUM EXCAVATED AND HAULED FROM THE TEMPORARY GYPSUM DEWATERING CELLS LOCATED IN THE ASH POND.
3. THE INITIAL RIM DITCH WILL BE CONSTRUCTED BEGINNING AT THE DISCHARGE CONTAINMENT BASIN'S SPILLWAY LOCATION PROGRESSING ALONG THE PERIMETER OF THE DISPOSAL CELL TO THE LOWER TIER (PHASE 1).THE RIM DITCH SHALL CONSIST OF AN INTERIOR BERM OF SUFFICIENT WIDTH TO PROVIDE ACCESS AND MANEUVERABILITY FOR A TRACKED EXCAVATOR DURING GYPSUM CLEAN – OUT OF THE RIM DITCH.
4. THE RIM DITCH SHALL BE CONSTRUCTED TO CONTAIN THE DISCHARGE FROM THE DISCHARGE CONTAINMENT BASIN TO PREVENT THE EROSION OF THE 24 INCH PROTECTIVE COVER ON THE BOTTOM OF THE CELL.
5. SLUICING OPERATIONS BEGIN WITH THE DISCHARGE OF GYPSUM SLURRY INTO THE CONTAINMENT BASIN. FLOW FROM THE CONTAINMENT BASIN WILL BE DIRECTED INTO THE RIM DITCH TOWARD THE FAR DOWNSTREAM END OF THE CELL (PHASE 1). THE GYPSUM WILL SETTLE OUT IN THE CONTAINMENT BASIN AND IN THE RIM DITCH AS THE SLURRY FLOWS ALONG THE RIM DITCH. IN ORDER TO PREVENT EROSION OF THE SAND COVER AND TO FACILITATE SETTLING, CHECK BERMS OF GYPSUM, GRAVEL OR SOIL MAY BE PLACED AT INTERVALS IN THE RIM DITCH. IT WILL BE PRUDENT TO COVER THE SAND PROTECTIVE COVER WITH GYPSUM AS APPROPRIATE.
6. GYPSUM EXCAVATED FROM THE DISCHARGE CONTAINMENT BASIN SHOULD BE CAST TO THE AREA IMMEDIATELY OUTSIDE THE CONTAINMENT BASIN BERM, AND INSIDE THE DISPOSAL CELL, WHERE IT WILL DEWATER BY GRAVITY. THE DEWATERED GYPSUM SHOULD BE USED TO EXTEND THE INITIAL RIM DITCH, CONSTRUCT A SECOND RIM DITCH, OR COVER ANY EXPOSED AREAS OF THE 24 INCH SAND PROTECTIVE LAYER.
7. AFTER THE GYPSUM HAS ACCUMULATED IN THE RIM DITCH, THE DITCH CAN BE EXCAVATED BY A TRACKED EXCAVATOR LOCATED ON THE PERIMETER BERM OR THE INTERIOR BERM OF THE RIM DITCH. AS THE RIM DITCH IS EXCAVATED, THE GYPSUM WILL BE CAST ON EITHER SIDE OF THE DITCH AS THE EXCAVATOR TRAVELS ALONG THE DIKE/BERM.
8. THE RIM DITCH MAY BE BLOCKED OR DAMMED AT ANY POINT SO THAT THE FUTURE GYPSUM SLURRY MAY BE DIRECTED TOWARD THE INTERIOR OF THE CELL IN LATERAL DITCHES.
9. THE LATERAL DITCHES SHOULD BE CONSTRUCTED OF GYPSUM EXCAVATED FROM THE PREVIOUS DITCH OR FROM THE DISCHARGE CONTAINMENT BASIN.
10. THE CAST GYPSUM EXCAVATED FROM THE RIM DITCHES WILL BE SPREAD BY TRACKED DOZERS, ALONG THE DIRECTION OF THE RIM DITCHES AND ON BOTH SIDES, TO PROVIDE WORKING PADS FOR EXCAVATION OF FUTURE RIM DITCHES AS WELL AS SECTIONS FOR RAISING THE GYPSUM STACK.
11. THIS METHOD OF ALLOWING GYPSUM SETTLEMENT AND RIM AND LATERAL DITCH EXCAVATION IN PHASES WILL BE UTILIZED FOR FILLING TO THE FINAL STACK ELEVATIONS.
12. AS FILLING OF THE FIRST LIFT PROGRESSES, SLURRY WATER AND STORM WATER ARE DIRECTED TO THE LOW END OF THE CELL TOWARDS THE RISER AND DISCHARGE PIPE.
13. AS THE RIM DITCHES ARE EXCAVATED, A MINIMUM OF 3 FEET OF GYPSUM SHALL BE LEFT IN PLACE ABOVE THE DRAINAGE SYSTEM TO PROVIDE A PROTECTIVE LAYER.
14. THE RISER AND DISCHARGE ASSEMBLY MAY BE USED AS LONG AS PRACTICAL TO PROVIDE DRAINAGE FROM WITHIN THE CELL TO THE SEDIMENTATION BASIN. HOWEVER, IT IS ANTICIPATED THAT THE USE OF THIS ASSEMBLY WILL BE TERMINATED AFTER FILLING OF THE FIRST 20 FT. LIFT ABOVE THE PERIMETER BERM. AT THAT TIME THE SIPHON DISCHARGE SYSTEM WILL BE INSTALLED FOR USE AND THE RISER/DISCHARGE ASSEMBLY WILL BE ABANDONED IN PLACE.
15. THE SIPHON SPILLWAY, DISCHARGING TO THE PERIMETER DITCH (OR TOWARD THE RISER/DISCHARGE STRUCTURE), WILL BE UTILIZED FOR CONTROLLING THE LEVEL OF SLURRY AND STORM WATER DURING FILLING AND RAISING OF EACH 20 FT. LIFT. A SECOND SIPHON WILL BE INSTALLED AND BE OPERABLE FOR THE SUBSEQUENT 20 FT. LIFT BEFORE MOVING THE PREVIOUS SIPHON.
16. PROPER WATER MANAGEMENT PROCEDURES SHALL BE FOLLOWED TO ENSURE THAT OVERTOPPING OF ANY DISCHARGE SETTLING POOLS IS PREVENTED AND THAT SUFFICIENT FREEBOARD BE MAINTAINED IN POOLS FOR STORAGE OF EXPECTED RAINFALL EVENTS. SIPHONS WILL NEED TO BE OPERATED AS NEEDED PRIOR TO AND DURING A STORM EVENT TO ENSURE NO OVERTOPPING.
17. FOR EACH SUBSEQUENT LEVEL OF GYPSUM SLUICING AND GYPSUM DIKE AND RIM DITCH CONSTRUCTION, THE SAME CONSTRUCTION TECHNIQUES AND OPERATIONS WILL APPLY. GYPSUM SLUICE LINES WILL BE PROGRESSIVELY EXTENDED UP THE GYPSUM SLOPES TO THE NEXT LEVEL AS FILLING PROGRESSES.
18. GYPSUM SLOPES SHALL BE MAINTAINED UNTIL THE FINAL COVER SYSTEM IS PLACED.
19. THE CELLS WILL BE CLOSED IN ACCORDANCE WITH THE CLOSURE PLAN.

ABANDONMENT PROCEDURES

RISER STRUCTURE AND DECANT PIPE ASSEMBLY

THE CELL 1, CELL 2, AND CELL 3 RISER STRUCTURES AND DECANT PIPE ASSEMBLIES WILL BE ABANDONED IN PLACE ONCE THE RESPECTIVE STRUCTURE HAS REACHED ITS INTENDED SERVICE LIFE, TYPICALLY, AS THE DEPOSITED GYPSUM REACHES OR APPROACHES THE UPPER ELEVATIONS DEFINED BY THE PERIMETER BERM OR ELEVATION OF THE RISER STRUCTURE.

ABANDONMENT OF THE CONCRETE RISER STRUCTURE AND HDPE DECANT PIPE ASSEMBLY WILL BE ACCOMPLISHED BY COMPLETELY FILLING THE DECANT PIPE AND THE LOWER PORTION OF THE RISER STRUCTURE WITH A SELF-LEVELING, LOW STRENGTH, NON-SHRINK, FLOWABLE FILL, GROUT, OR LIGHTWEIGHT CELLULAR CONCRETE IN GENERAL ACCORDANCE WITH THE FOLLOWING PROCEDURES.

1. THE DECANT PIPE UPSTREAM OPENING IN THE RISER STRUCTURE SHALL BE BLOCKED/SEALED WITH A STEEL BULKHEAD. A GROUT INJECTION PORT SHALL BE PROVIDED IN THE TOP PORTION OF THE BULKHEAD, EXTENDING INTO THE HDPE DECANT PIPE. THE UPSTREAM END OF THE INJECTION PORT SHALL BE AFFIXED WITH A 90 ° ELBOW AND PIPE EXTENSION TO RECEIVE THE VERTICAL GROUT PIPE FROM INSIDE THE RISER STRUCTURE. THE VERTICAL PIPE FROM THE INJECTION PORT SHALL EXTEND TO ABOVE THE LEVEL OF CONCRETE POURED TO PLUG THE BOTTOM OF THE RISER (SEE #4 BELOW).
2. A VERTICAL GROUT PIPE SHALL BE THREADED ONTO THE INJECTION PORT EXTENSION AFFIXED TO THE STEEL BULKHEAD AND EXTEND UPWARD TO THE TOP OF THE RISER STRUCTURE.
3. THE VERTICAL GROUT PIPE SHALL BE EQUIPPED WITH A BLEED VALVE AND PRESSURE GAGE ASSEMBLY BELOW THE GROUT NOZZLE ATTACHMENT POINT.
4. THE BOTTOM OF THE RISER STRUCTURE SHALL BE FILLED WITH CONCRETE TO A HEIGHT OF 1.5 TIMES THE DIAMETER OF THE DECANT PIPE.
5. THE DOWNSTREAM OUTLET OF THE DECANT PIPE SHALL BE SEALED WITH A BULKHEAD OR CONCRETE PLUG.
6. THE DECANT PIPE SHALL BE FILLED WITH A FLOWABLE, SELF-LEVELING GROUT OR CONCRETE.
7. THE GROUT OR FLOWABLE CONCRETE MIX DESIGN SHALL BE SUBMITTED FOR APPROVAL PRIOR TO ABANDONMENT.
8. THE REMAINING VERTICAL PORTION OF THE RISER STRUCTURE MAY EITHER BE FILLED WITH CONCRETE OR BACKFILLED WITH GYPSUM FROM THE DISPOSAL CELL.

MATERIAL RECLAMATION FOR MARKET

1. ANY DRYING AND TEMPORARY STORAGE OF GYPSUM FOR POSSIBLE REUSE WILL BE ACCOMPLISHED WITHIN THE FOOTPRINT OF THE CELL. AN AREA, OR AREAS, CAN BE PROVIDED WITHIN THE CELL BY DIRECTING SLURRY AWAY FROM THE STORAGE/DRYING AREA SUCH THAT THE AREA AND STOCKPILES CAN BE WORKED APPROPRIATELY.

GEORGIA
DEPARTMENT OF NATURAL RESOURCES
ENVIRONMENTAL PROTECTION DIVISION
Approved
Solid Waste Management Program
Approved By: Keith Stevens Digitally signed by Keith Stevens Date: 2022.10.25 08:59:48 -04'00'

R. GRANT LANE No. 27185 9/27/22

9/27/22

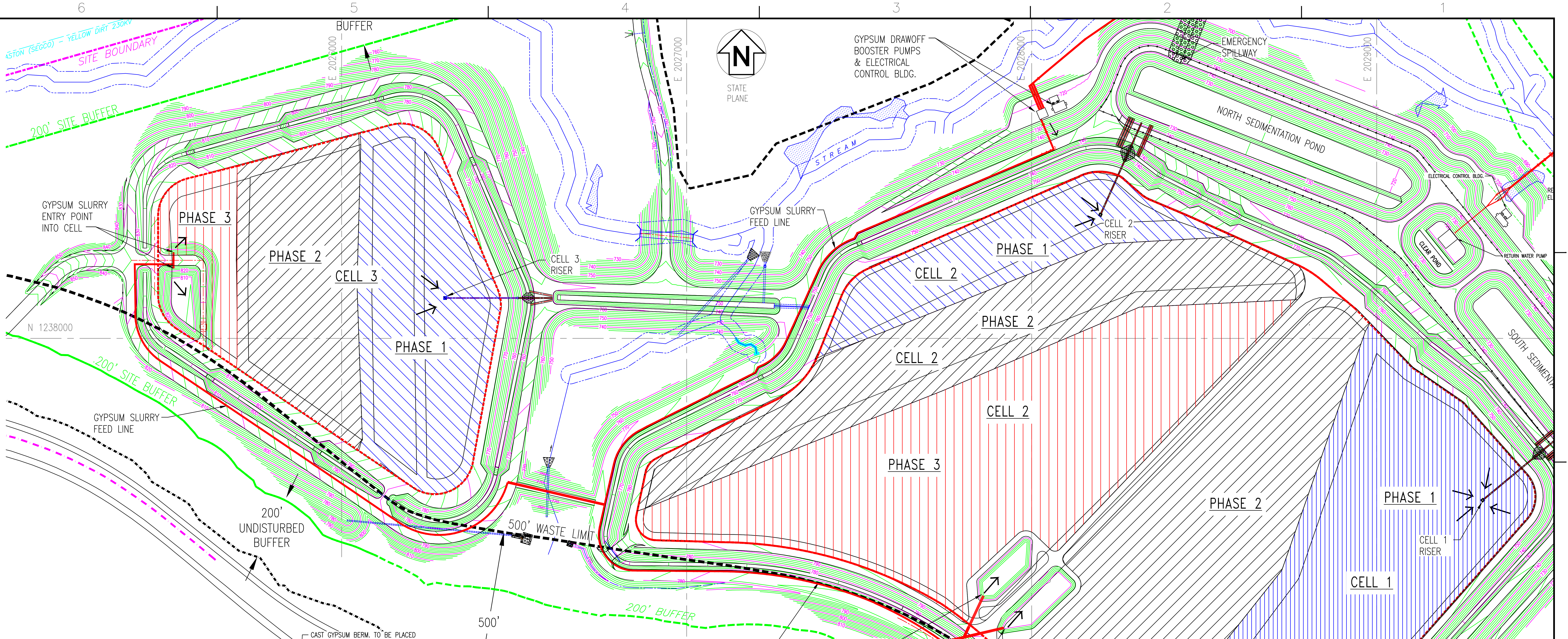

BUFFER
SITE BOUNDARY
ASTON (SEGCO) – YELLOW DIRT 230KV
200' SITE BUFFER
E 2026000
E 2027000
E 2028000
E 2029000
N 1238000
N 1237000
STATE PLANE
STREAM
GYPSUM SLURRY ENTRY POINT INTO CELL
PHASE 3
PHASE 2
CELL 3
PHASE 1
CELL 3 RISER
GYPSUM SLURRY FEED LINE
GYPSUM DRAWOFF BOOSTER PUMPS & ELECTRICAL CONTROL BLDG.
EMERGENCY SPILLWAY
NORTH SEDIMENTATION POND
ELECTRICAL CONTROL BLDG.
RETURN WATER PUMP
CLEAR POND
SOUTH SEDIMENTA
CELL 2 RISER
PHASE 1
CELL 2
PHASE 2
CELL 2
CELL 2
PHASE 3
PHASE 2
PHASE 1
CELL 1 RISER
CELL 1
200' SITE BUFFER
200' UNDISTURBED BUFFER
500' WASTE LIMIT
500'
200' BUFFER
GYPSUM SLURRY FEED LINE
GYPSUM SLURRY ENTRY POINT INTO CELLS
GYPSUM SLURRY ENTRY POINT INTO CELLS
SITE BOUNDARY
200' BUFFER
200' UNDISTURBED BUFFER
SITE BOUNDARY
500' WASTE LIMIT

CAST GYPSUM BERM. TO BE PLACED WHERE NECESSARY TO ALLOW GYPSUM BUILD UP IN THE RIM DITCH, OR DIRECT SLURRY TO LATERAL DITCH.

INITIAL CELL FILLING PLAN WITH RIM DITCHES
N.T.S.

LEGEND:

▨ CAST GYPSUM DIKE	▨ SETTLED GYPSUM
▨ CAST GYPSUM DIKE SLOPES (3:1)	☐ WATER PONDING
▨ SLUICED GYPSUM	

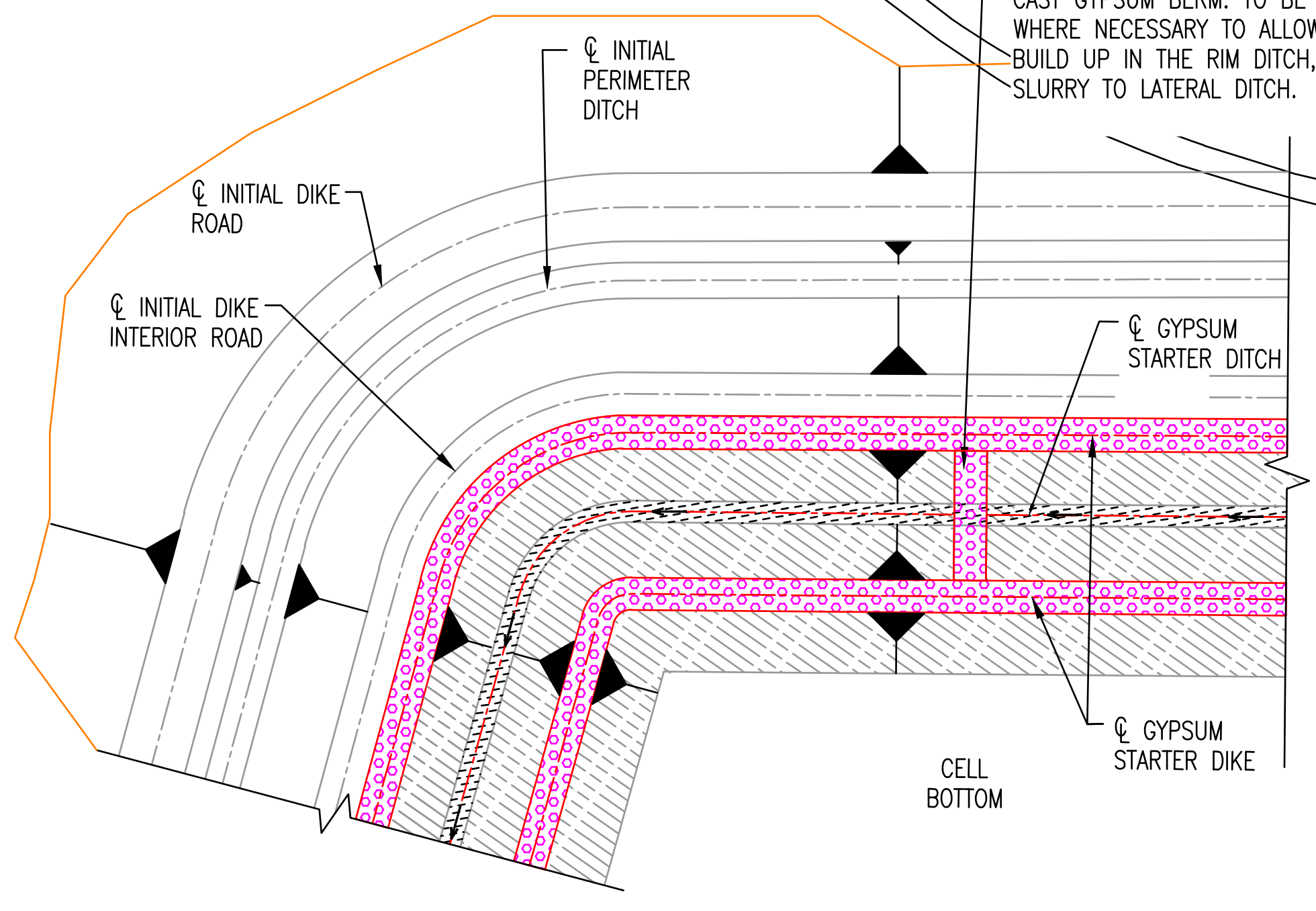

℄ INITIAL PERIMETER DITCH
℄ INITIAL DIKE ROAD
℄ INITIAL DIKE INTERIOR ROAD
℄ GYPSUM STARTER DITCH
℄ GYPSUM STARTER DIKE
CELL BOTTOM

TYPICAL GYPSUM STARTER (RIM) DITCH DETAIL
N.T.S.

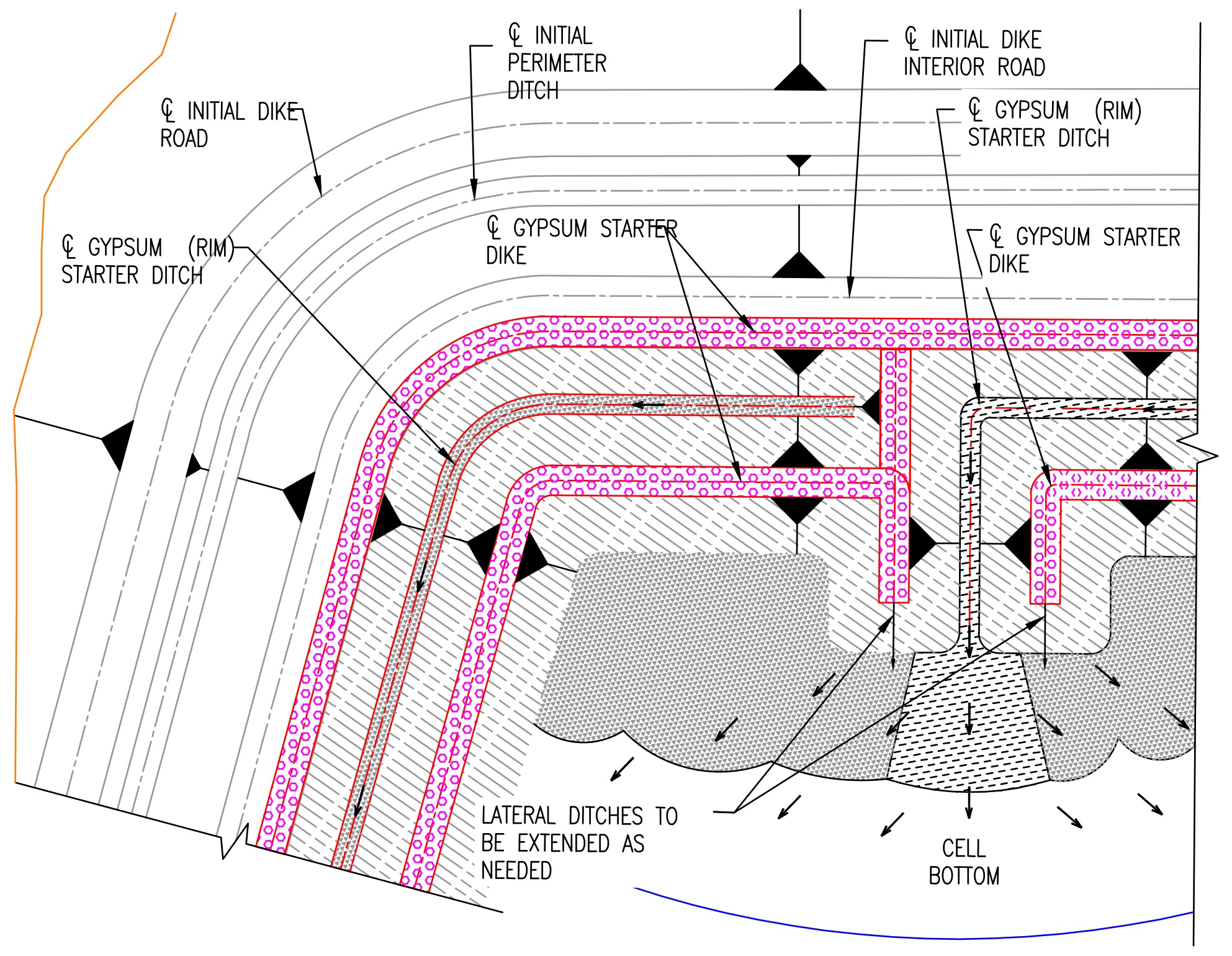

℄ INITIAL PERIMETER DITCH
℄ INITIAL DIKE INTERIOR ROAD
℄ INITIAL DIKE ROAD
℄ GYPSUM (RIM) STARTER DITCH
℄ GYPSUM STARTER DIKE
℄ GYPSUM (RIM) STARTER DITCH
℄ GYPSUM STARTER DIKE
LATERAL DITCHES TO BE EXTENDED AS NEEDED
CELL BOTTOM

TYPICAL LATERAL DITCH DETAIL
N.T.S.

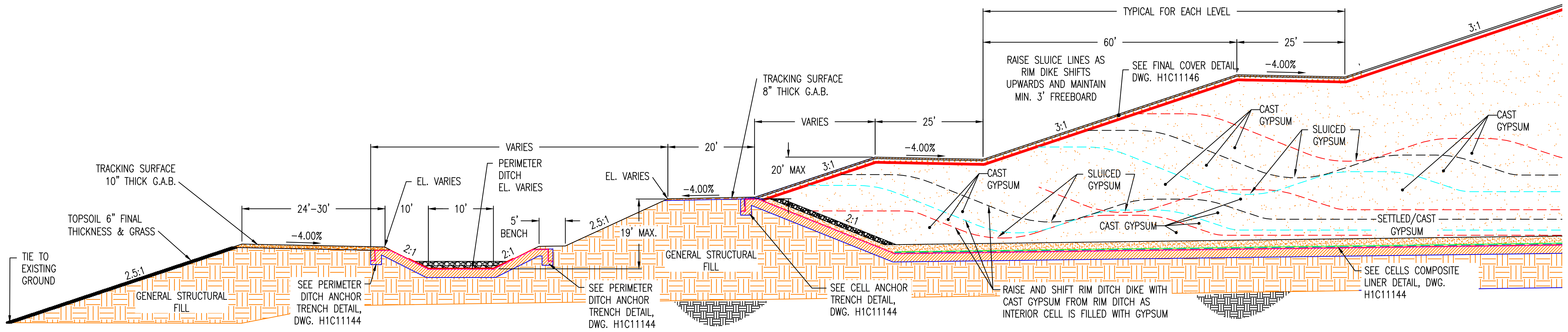

TIE TO EXISTING GROUND
TOPSOIL 6" FINAL THICKNESS & GRASS
TRACKING SURFACE 10" THICK G.A.B.
2.5:1
GENERAL STRUCTURAL FILL
24'–30'
–4.00%
VARIES
EL. VARIES
10'
10'
PERIMETER DITCH EL. VARIES
2:1
2:1
5' BENCH
SEE PERIMETER DITCH ANCHOR TRENCH DETAIL, DWG. H1C11144
SEE PERIMETER DITCH ANCHOR TRENCH DETAIL, DWG. H1C11144
EL. VARIES
2.5:1
19' MAX.
–4.00%
20'
GENERAL STRUCTURAL FILL
TRACKING SURFACE 8" THICK G.A.B.
VARIES
25'
20' MAX
3:1
–4.00%
2:1
TYPICAL FOR EACH LEVEL
60'
25'
RAISE SLUICE LINES AS RIM DIKE SHIFTS UPWARDS AND MAINTAIN MIN. 3' FREEBOARD
SEE FINAL COVER DETAIL, DWG. H1C11146
–4.00%
3:1
3:1
CAST GYPSUM
SLUICED GYPSUM
CAST GYPSUM
SLUICED GYPSUM
CAST GYPSUM
CAST GYPSUM
SETTLED/CAST GYPSUM
SEE CELL ANCHOR TRENCH DETAIL, DWG. H1C11144
RAISE AND SHIFT RIM DITCH DIKE WITH CAST GYPSUM FROM RIM DITCH AS INTERIOR CELL IS FILLED WITH GYPSUM
SEE CELLS COMPOSITE LINER DETAIL, DWG. H1C11144

TYPICAL GYPSUM DIKE CONSTRUCTION DEVELOPMENT OF GYPSUM STACK
N.T.S.

Southern Company Services, Inc.

Southern Company Generation
Engineering and Construction Services
FOR
Georgia Power Company

PLANT WANSLEY
COAL COMBUSTION RESIDUALS (CCR) LANDFILL
GENERAL GYPSUM STACKING
OPERATION PLAN

REVISION	DATE	REVISION	DATE	REVISION	DATE	REVISION	DATE	REVISION	DATE	REVISION	DATE
										REVISION 0	DATE 09-23-2022
										CCR LF PERMIT APPLICATION [BY HHNT, INC.]	

BY	CHK'D	CIVIL APPR	ELECT APPR	I/C APPR	MECH APPR	DISC MGR	SCALE	DRAWING NUMBER	SHEET	CONT'D	REV
ANR	RBL		☒	☒	☒	☒	AS NOTED	**H1C11142**	1	FINAL	0

Acad2008 ANSI F: 40x28

target ZERO Every day, every job, safely.

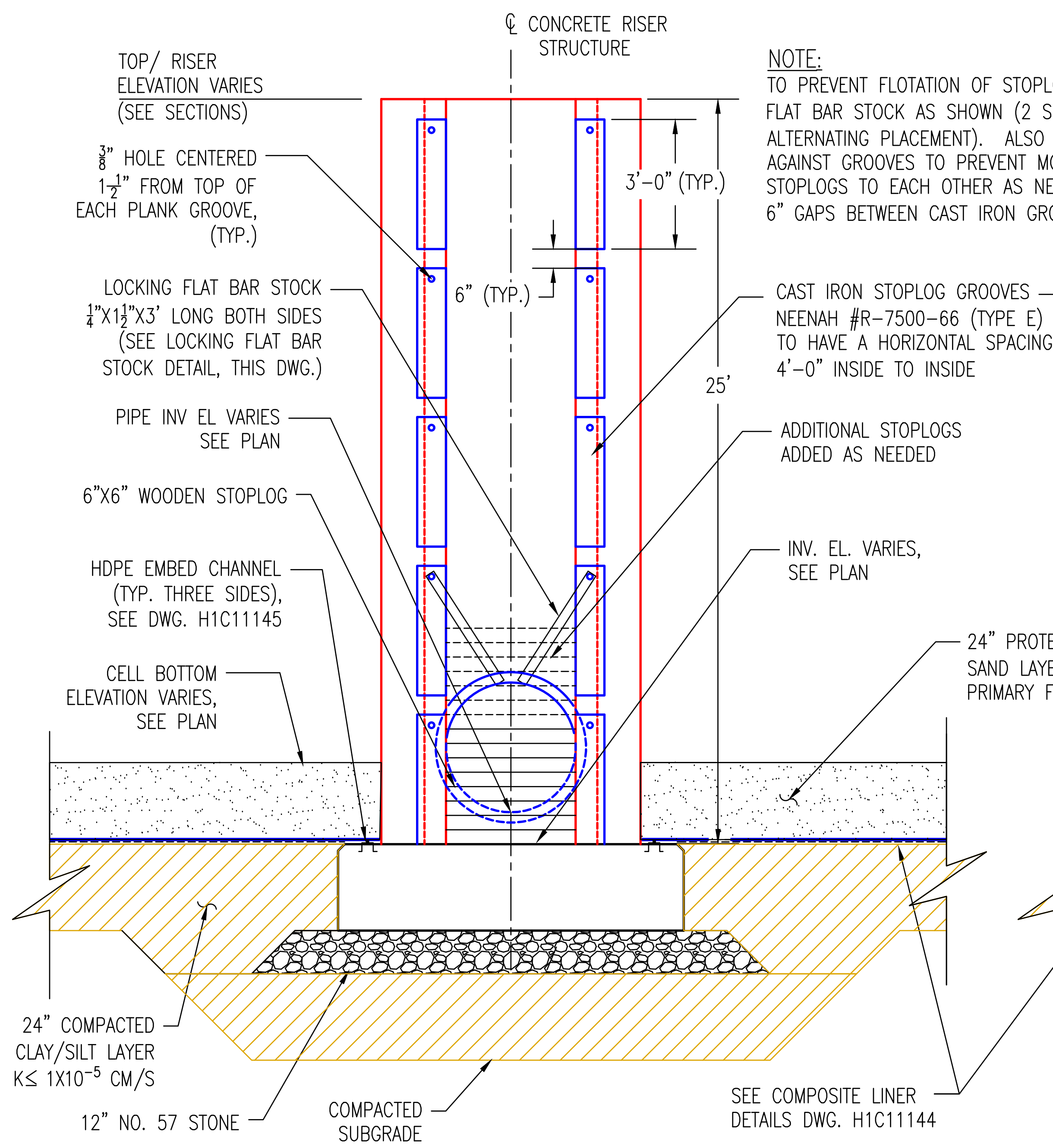
TOP/ RISER ELEVATION VARIES (SEE SECTIONS)
℄ CONCRETE RISER STRUCTURE
3/8" HOLE CENTERED 1 1/2" FROM TOP OF EACH PLANK GROOVE, (TYP.)
3'-0" (TYP.)
6" (TYP.)
25'
LOCKING FLAT BAR STOCK 1/4"X1 1/2"X3' LONG BOTH SIDES (SEE LOCKING FLAT BAR STOCK DETAIL, THIS DWG.)
CAST IRON STOPLOG GROOVES NEENAH #R-7500-66 (TYPE E) TO HAVE A HORIZONTAL SPACING OF 4'-0" INSIDE TO INSIDE
PIPE INV EL VARIES SEE PLAN
ADDITIONAL STOPLOGS ADDED AS NEEDED
6"X6" WOODEN STOPLOG
INV. EL. VARIES, SEE PLAN
HDPE EMBED CHANNEL (TYP. THREE SIDES), SEE DWG. H1C11145
CELL BOTTOM ELEVATION VARIES, SEE PLAN
24" PROTECTIVE SAND LAYER/ PRIMARY FILTER
24" COMPACTED CLAY/SILT LAYER K≤ 1X10^-5 CM/S
12" NO. 57 STONE
COMPACTED SUBGRADE
SEE COMPOSITE LINER DETAILS DWG. H1C11144

RISER STRUCTURE SECTION

H1C11125, H1C11127 & H1C11129

N.T.S.

NOTE:
TO PREVENT FLOTATION OF STOPLOGS, USE LOCKING FLAT BAR STOCK AS SHOWN (2 SETS REQUIRED FOR ALTERNATING PLACEMENT). ALSO SHIM STOPLOGS AGAINST GROOVES TO PREVENT MOVEMENT AND JOIN STOPLOGS TO EACH OTHER AS NEEDED...I.E. AT THE 6" GAPS BETWEEN CAST IRON GROOVES.

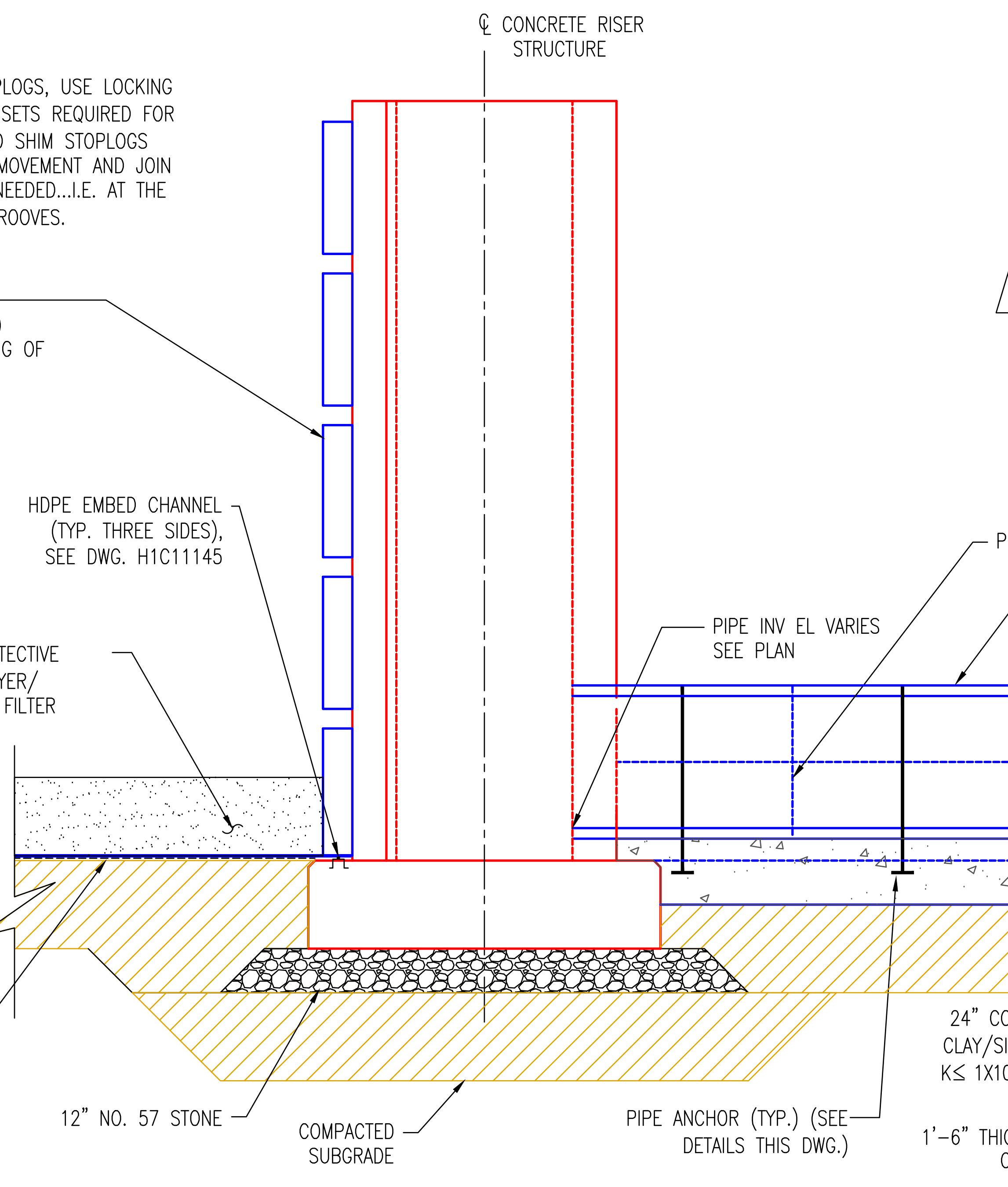
℄ CONCRETE RISER STRUCTURE
HDPE EMBED CHANNEL (TYP. THREE SIDES), SEE DWG. H1C11145
PIPE INV EL VARIES SEE PLAN
PIPE JOINT
36" DIA. DUAL WALL HDPE OUTLET PIPE, SEE PLAN FOR SLOPE
12" NO. 57 STONE
COMPACTED SUBGRADE
PIPE ANCHOR (TYP.) (SEE DETAILS THIS DWG.)
24" COMPACTED CLAY/SILT LAYER K≤ 1X10^-5 CM/S
1'-6" THICK REINFORCED CONCRETE BASE

RISER STRUCTURE & DECANT PIPE

H1C11125, H1C11127, & H1C11129

N.T.S.

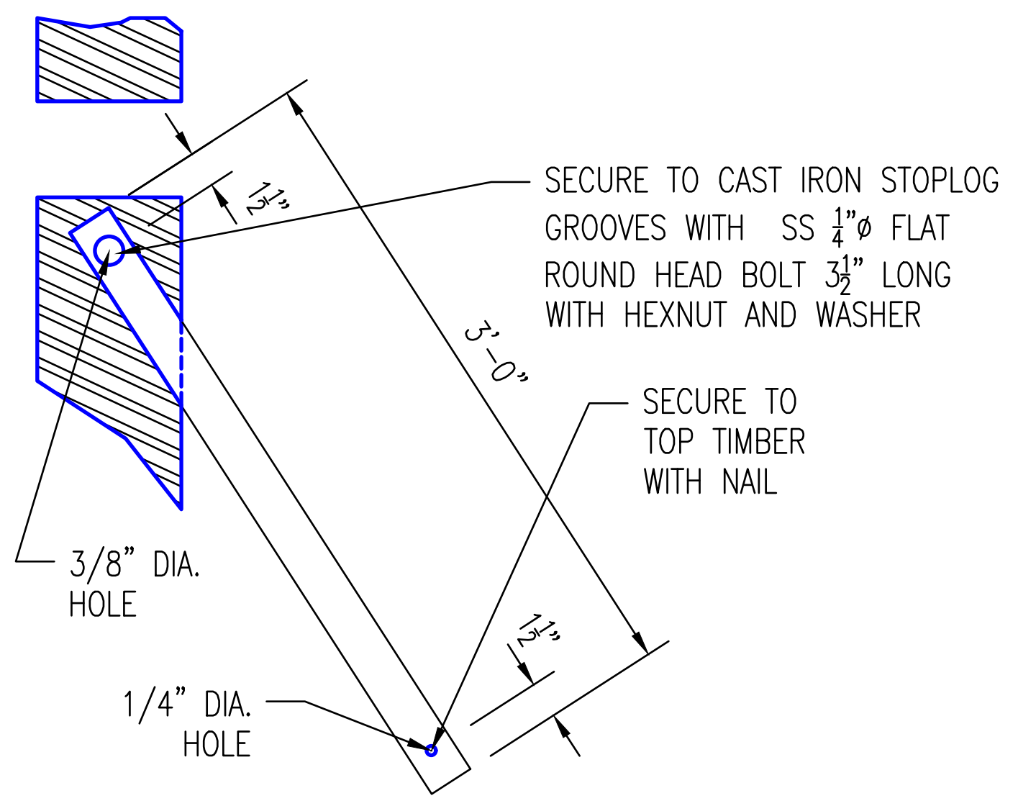
1 1/2"
3'-0"
SECURE TO CAST IRON STOPLOG GROOVES WITH SS 1/4"ø FLAT ROUND HEAD BOLT 3 1/2" LONG WITH HEXNUT AND WASHER
SECURE TO TOP TIMBER WITH NAIL
3/8" DIA. HOLE
1/4" DIA. HOLE
1 1/2"

LOCKING FLAT BAR STOCK DETAIL

N.T.S.

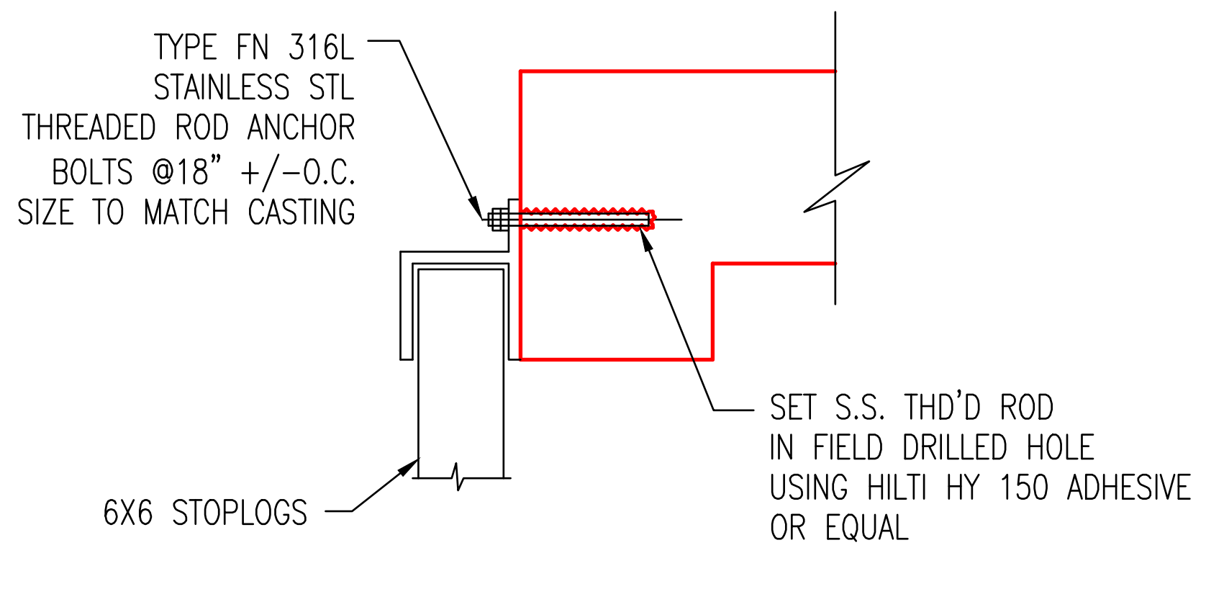
TYPE FN 316L STAINLESS STL THREADED ROD ANCHOR BOLTS @18" +/-O.C. SIZE TO MATCH CASTING
SET S.S. THD'D ROD IN FIELD DRILLED HOLE USING HILTI HY 150 ADHESIVE OR EQUAL
6X6 STOPLOGS

DETAIL "1"

N.T.S.

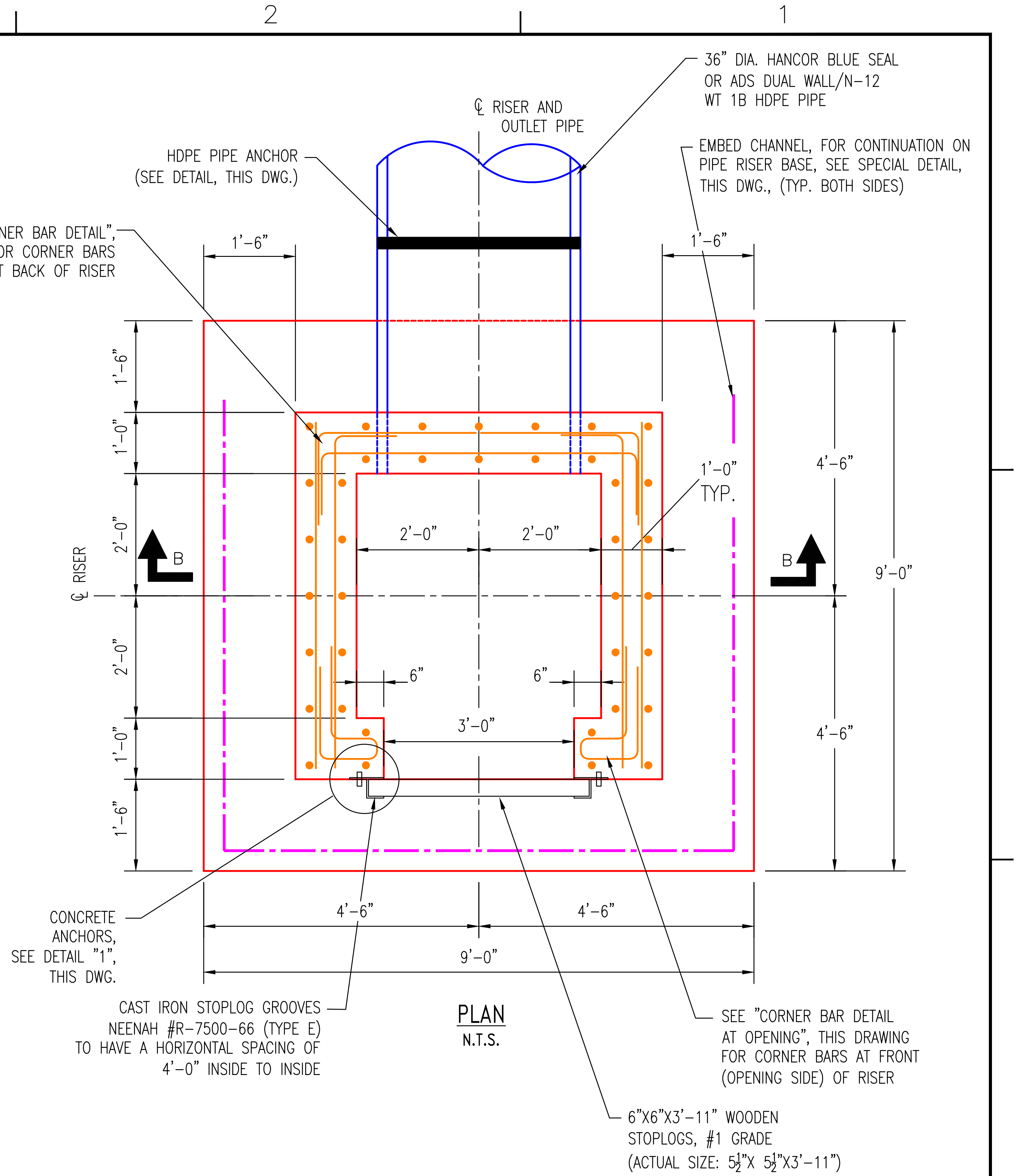
36" DIA. HANCOR BLUE SEAL OR ADS DUAL WALL/N-12 WT 1B HDPE PIPE
℄ RISER AND OUTLET PIPE
HDPE PIPE ANCHOR (SEE DETAIL, THIS DWG.)
EMBED CHANNEL, FOR CONTINUATION ON PIPE RISER BASE, SEE SPECIAL DETAIL, THIS DWG., (TYP. BOTH SIDES)
SEE "TYP. CORNER BAR DETAIL", THIS DRAWING FOR CORNER BARS AT BACK OF RISER
1'-6"
1'-6"
1'-0"
2'-0"
2'-0"
1'-0"
1'-6"
℄ RISER
B
B
1'-0" TYP.
2'-0"
2'-0"
6"
6"
3'-0"
4'-6"
4'-6"
9'-0"
4'-6"
4'-6"
9'-0"
CONCRETE ANCHORS, SEE DETAIL "1", THIS DWG.
CAST IRON STOPLOG GROOVES NEENAH #R-7500-66 (TYPE E) TO HAVE A HORIZONTAL SPACING OF 4'-0" INSIDE TO INSIDE
SEE "CORNER BAR DETAIL AT OPENING", THIS DRAWING FOR CORNER BARS AT FRONT (OPENING SIDE) OF RISER
6"X6"X3'-11" WOODEN STOPLOGS, #1 GRADE (ACTUAL SIZE: 5 1/2"X 5 1/2"X3'-11")

PLAN

N.T.S.

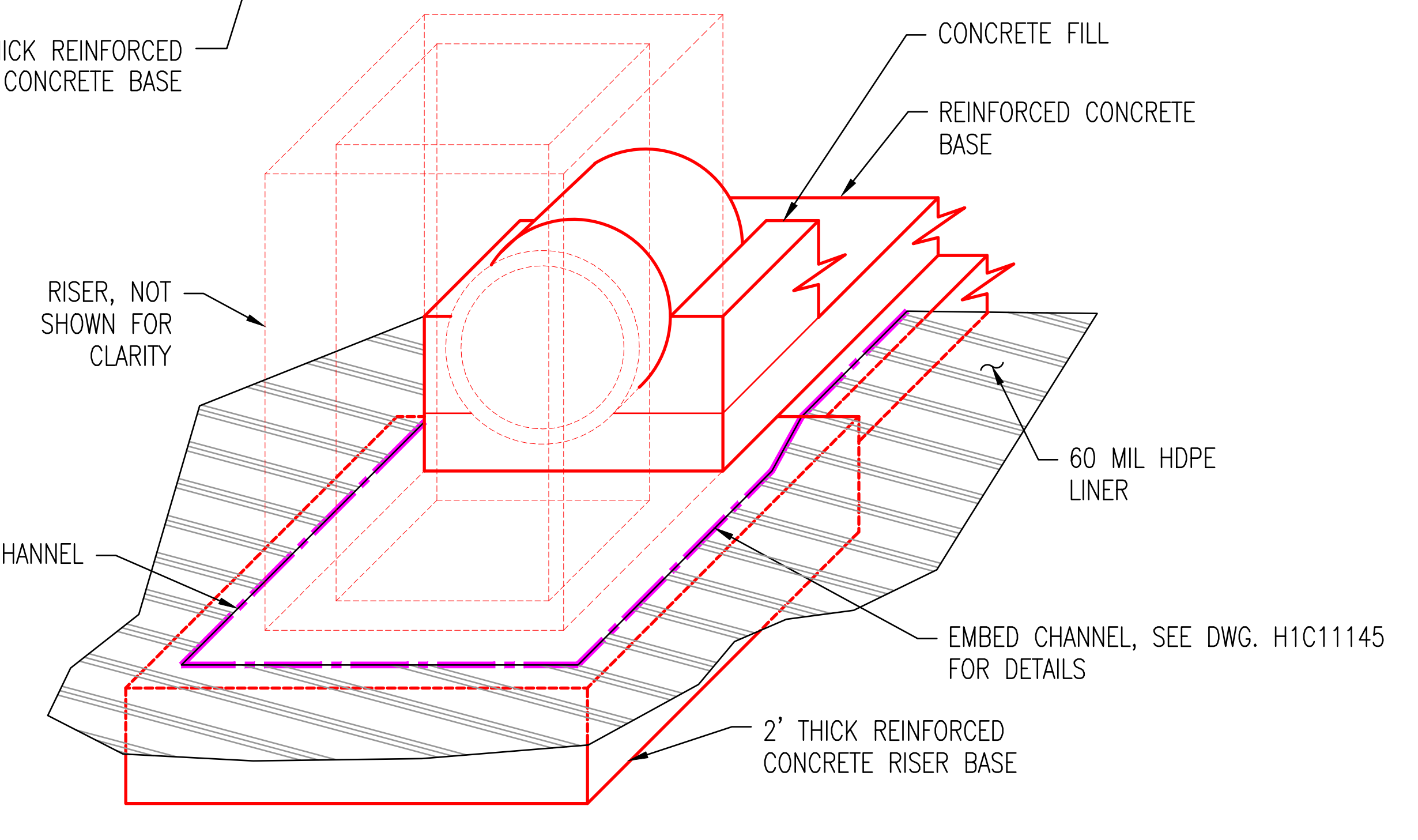
CONCRETE FILL
REINFORCED CONCRETE BASE
RISER, NOT SHOWN FOR CLARITY
60 MIL HDPE LINER
EMBED CHANNEL
EMBED CHANNEL, SEE DWG. H1C11145 FOR DETAILS
2' THICK REINFORCED CONCRETE RISER BASE

EMBED CHANNEL SPECIAL DETAIL

N.T.S.

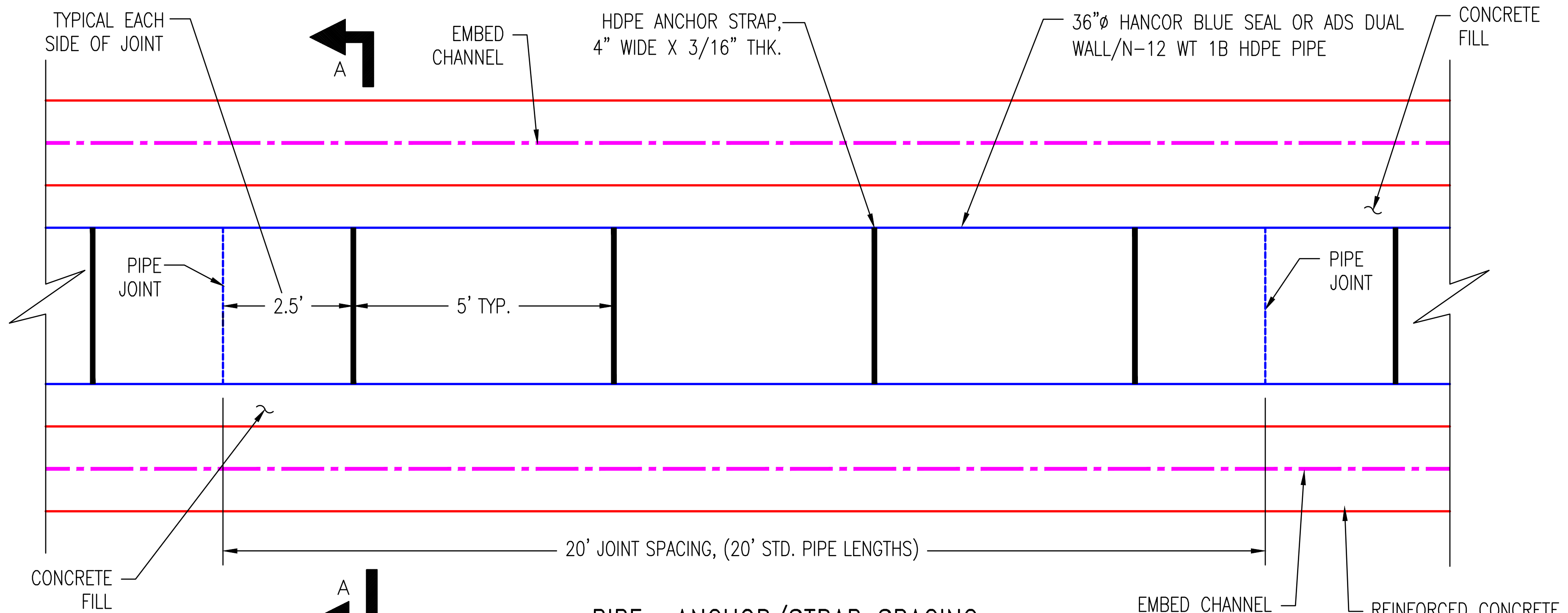
TYPICAL EACH SIDE OF JOINT
A
EMBED CHANNEL
HDPE ANCHOR STRAP, 4" WIDE X 3/16" THK.
36"ø HANCOR BLUE SEAL OR ADS DUAL WALL/N-12 WT 1B HDPE PIPE
CONCRETE FILL
PIPE JOINT
2.5'
5' TYP.
PIPE JOINT
20' JOINT SPACING, (20' STD. PIPE LENGTHS)
CONCRETE FILL
A
EMBED CHANNEL
REINFORCED CONCRETE BASE

PIPE ANCHOR/STRAP SPACING

N.T.S.

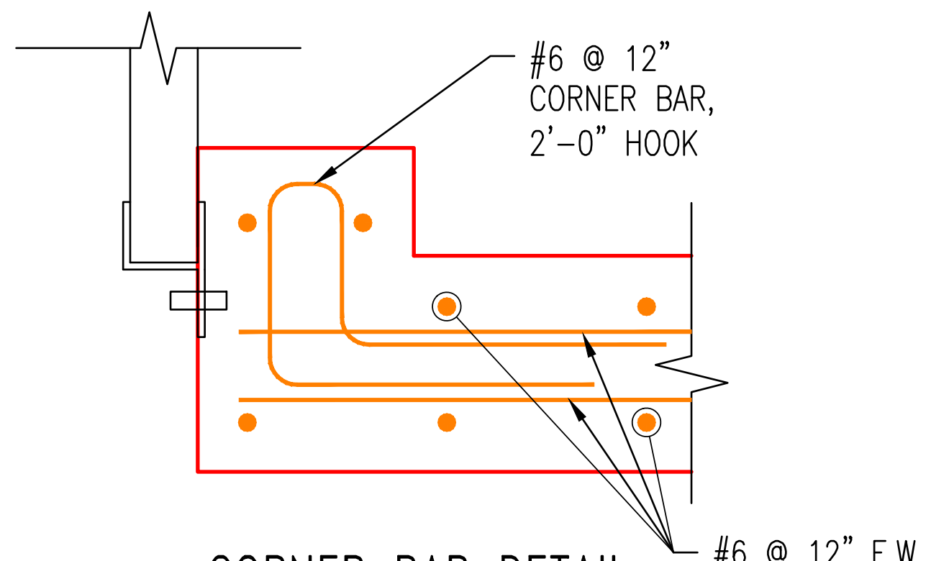
#6 @ 12" CORNER BAR, 2'-0" HOOK
#6 @ 12" E.W., E.F. (TYP.)

CORNER BAR DETAIL AT OPENING

N.T.S.

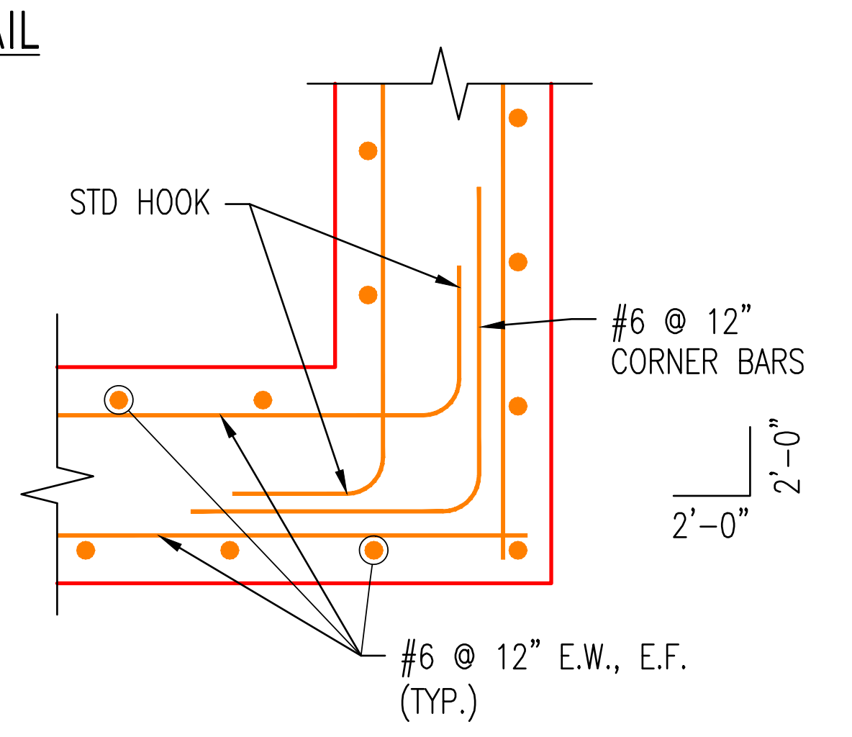
STD HOOK
#6 @ 12" CORNER BARS
2'-0"
2'-0"
#6 @ 12" E.W., E.F. (TYP.)

TYP. CORNER BAR DETAIL

N.T.S.

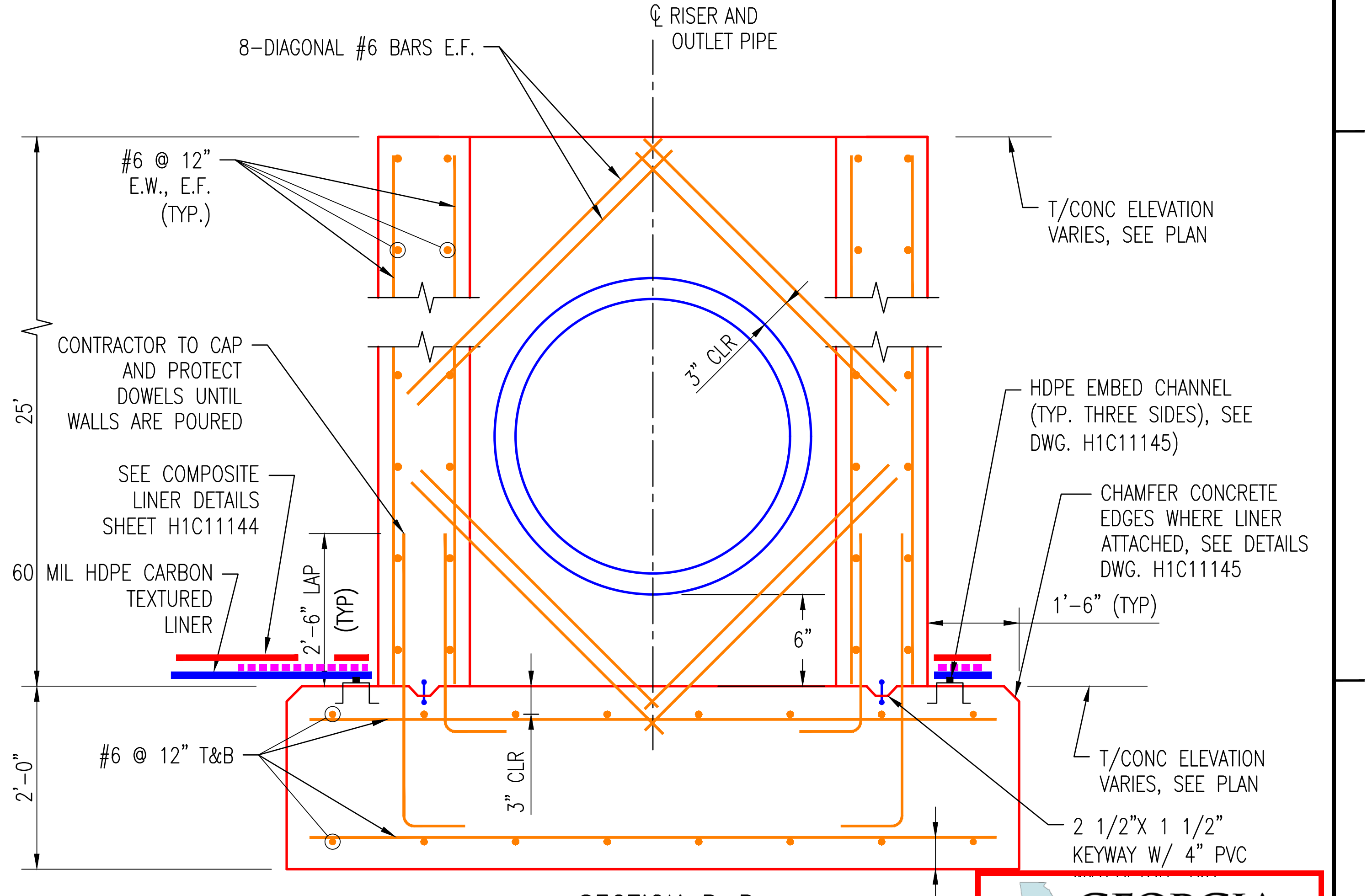
℄ RISER AND OUTLET PIPE
8-DIAGONAL #6 BARS E.F.
#6 @ 12" E.W., E.F. (TYP.)
T/CONC ELEVATION VARIES, SEE PLAN
CONTRACTOR TO CAP AND PROTECT DOWELS UNTIL WALLS ARE POURED
3" CLR
25'
HDPE EMBED CHANNEL (TYP. THREE SIDES), SEE DWG. H1C11145)
SEE COMPOSITE LINER DETAILS SHEET H1C11144
CHAMFER CONCRETE EDGES WHERE LINER ATTACHED, SEE DETAILS DWG. H1C11145
60 MIL HDPE CARBON TEXTURED LINER
2'-6" LAP (TYP)
6"
1'-6" (TYP)
#6 @ 12" T&B
2'-0"
3" CLR
T/CONC ELEVATION VARIES, SEE PLAN
2 1/2"X 1 1/2" KEYWAY W/ 4" PVC
3" CLR

SECTION B-B

N.T.S.

RISER STRUCTURE REINFORCEMENT DETAIL

N.T.S.

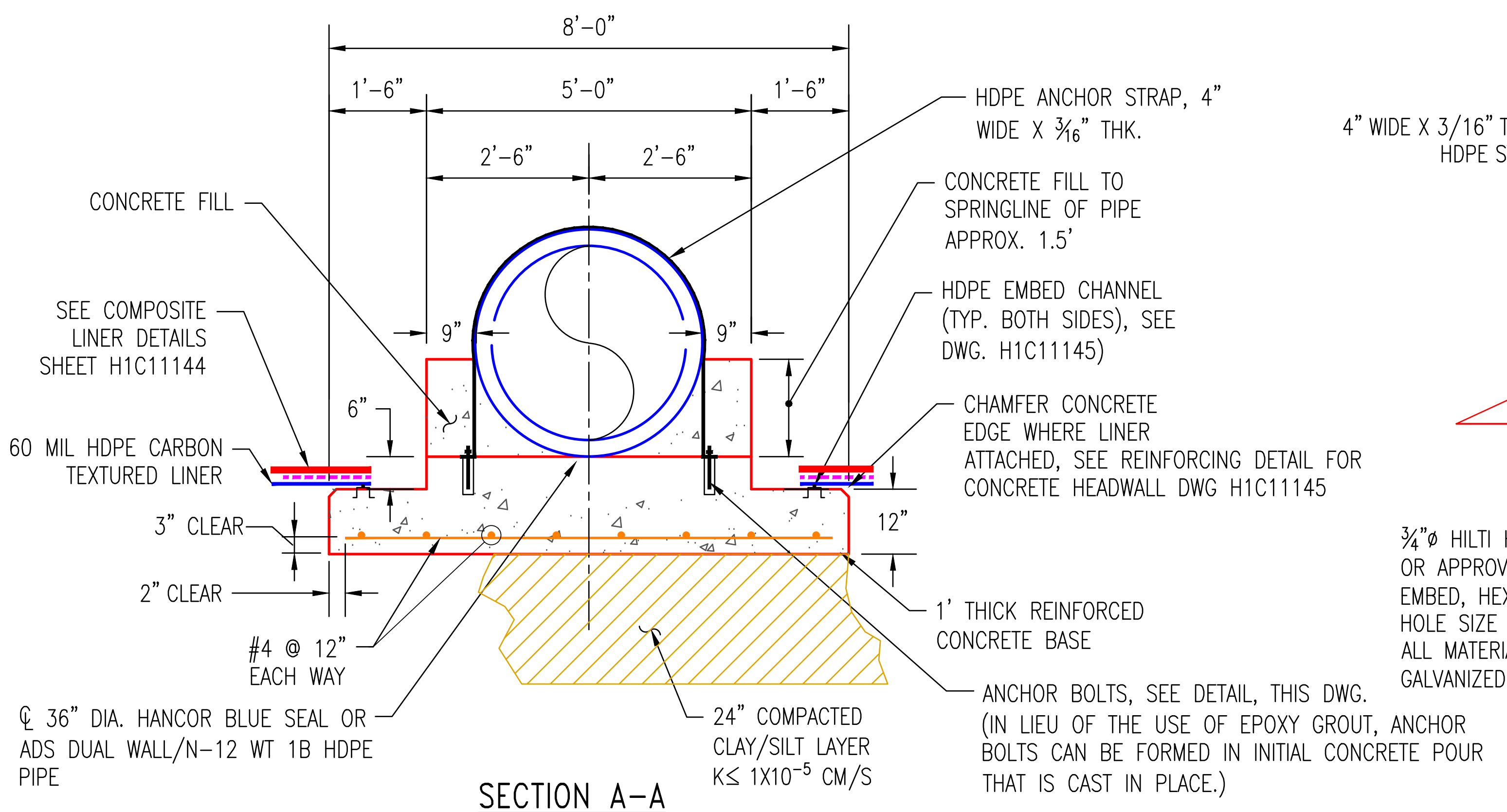
8'-0"
1'-6"
5'-0"
1'-6"
2'-6"
2'-6"
CONCRETE FILL
HDPE ANCHOR STRAP, 4" WIDE X 3/16" THK.
CONCRETE FILL TO SPRINGLINE OF PIPE APPROX. 1.5'
HDPE EMBED CHANNEL (TYP. BOTH SIDES), SEE DWG. H1C11145)
SEE COMPOSITE LINER DETAILS SHEET H1C11144
9"
9"
6"
CHAMFER CONCRETE EDGE WHERE LINER ATTACHED, SEE REINFORCING DETAIL FOR CONCRETE HEADWALL DWG H1C11145
60 MIL HDPE CARBON TEXTURED LINER
3" CLEAR
12"
2" CLEAR
1' THICK REINFORCED CONCRETE BASE
#4 @ 12" EACH WAY
℄ 36" DIA. HANCOR BLUE SEAL OR ADS DUAL WALL/N-12 WT 1B HDPE PIPE
24" COMPACTED CLAY/SILT LAYER K≤ 1X10^-5 CM/S
ANCHOR BOLTS, SEE DETAIL, THIS DWG. (IN LIEU OF THE USE OF EPOXY GROUT, ANCHOR BOLTS CAN BE FORMED IN INITIAL CONCRETE POUR THAT IS CAST IN PLACE.)

SECTION A-A

N.T.S.

PIPE ANCHOR DETAIL

N.T.S.

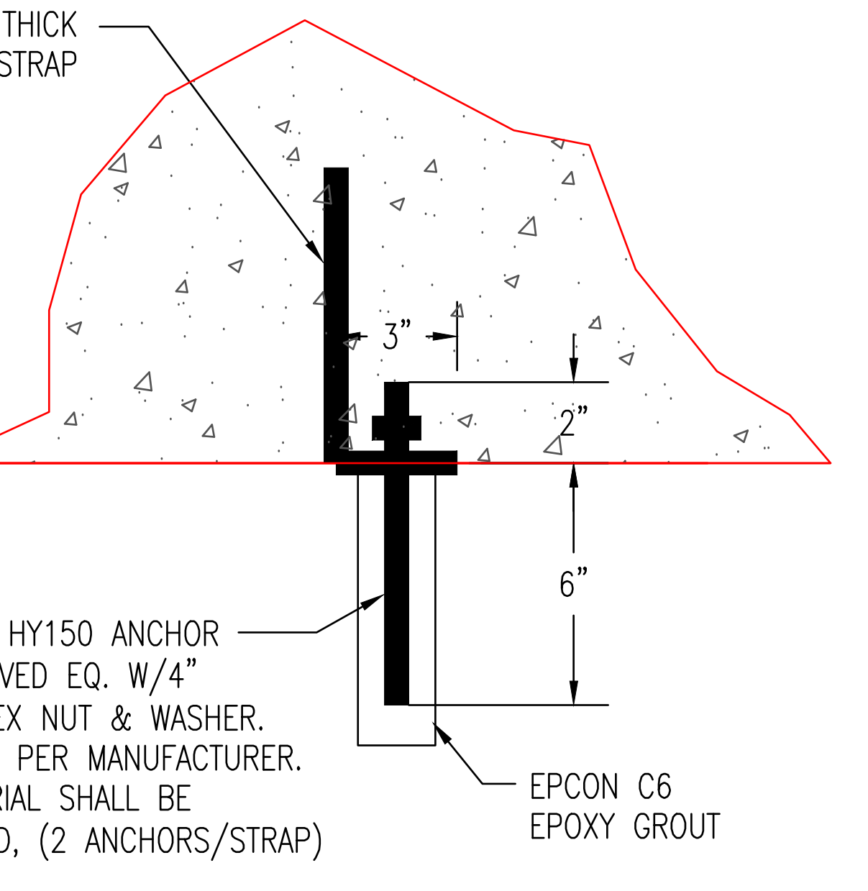
4" WIDE X 3/16" THICK HDPE STRAP
3"
2"
6"
3/4"ø HILTI HY150 ANCHOR OR APPROVED EQ. W/4" EMBED, HEX NUT & WASHER. HOLE SIZE PER MANUFACTURER. ALL MATERIAL SHALL BE GALVANIZED, (2 ANCHORS/STRAP)
EPCON C6 EPOXY GROUT

ANCHOR BOLT DETAIL

N.T.S.

NOTES:

1. ALL CONCRETE AND METAL THAT WILL BE EXPOSED TO OR IN CONTACT WITH GYPSUM AND/OR GYPSUM SLURRY WATER, UNLESS OTHERWISE NOTED, SHALL BE COATED WITH CHEMPRUF 2410 LINING SYSTEM BY ATLAS MINERALS AND CHEMICALS, INC. OR APPROVED EQUAL. THIS WILL INCLUDE ALL CONCRETE HEADWALLS AT DITCH CULVERT DRAIN PIPES IN CELLS, LINED DITCHES AND LINED PONDS AS WELL AS COLLARS/HEADWALLS AROUND THE GYPSUM SLUICE LINES, LEACHATE COLLECTION PIPES, CONCRETE SURFACES FOR HDPE CHANNEL EMBEDS AT RISER STRUCTURE AND ASSOCIATED DECANT PIPE, CONCRETE RISER STRUCTURES, AND ALL CONCRETE FOUNDATIONS AND EXPOSED CONCRETE WITHIN THE PONDS AND LINED DITCHES.

2. THE LINING SYSTEM MATERIALS SHALL BE STORED, HANDLED AND APPLIED AS PER MANUFACTURER'S GUIDELINES AND INSTRUCTIONS.

3. THE LINING SYSTEM SHALL BE APPLIED BY PAINTING/COATINGS CONTRACTOR KNOWLEDGEABLE AND EXPERIENCED WITH IT'S APPLICATION.

4. FOR CORRESPONDING ELEVATIONS, PIPE LENGTHS AND SLOPES FOR EACH RISER ASSEMBLY FOR CELLS 1, 2 & 3 SEE DRAWINGS:
   H1C11125 – FOR CELL 1
   H1C11131 – FOR CELL 2
   H1C11133 – FOR CELL 3

REFERENCES:

H1C11120 TITLE SHEET AND DRAWING INDEX
H1C11125 CELL NO. 1, SITE DEVELOPMENT, BASE GRADING PLAN
H1C11131 CELL NO. 2, SITE DEVELOPMENT, BASE GRADING PLAN
H1C11133 CELL NO. 3, SITE DEVELOPMENT, BASE GRADING PLAN
H1C11144 CELL NO. 1 THROUGH CELL NO. 3, MISCELLANEOUS DETAILS, SHEET 2
H1C11145 CELL NO. 1 THROUGH CELL NO. 3, MISCELLANEOUS DETAILS, SHEET 3

GEORGIA
DEPARTMENT OF NATURAL RESOURCES
ENVIRONMENTAL PROTECTION DIVISION
Approved
Solid Waste Management Program
Approved By: Keith Stevens Digitally signed by Keith Stevens Date: 2022.10.25 08:59:48 -04'00'

NO. 27185 PROFESSIONAL ENGINEER R. BRANT LANE 9/27/22

9/27/22

Southern Company Generation
Engineering and Construction Services
FOR

Georgia Power Company

PLANT WANSLEY
COAL COMBUSTION BY-PRODUCT DISPOSAL FACILITY
CELL NO. 1 THROUGH CELL NO. 3
MISCELLANEOUS DETAILS
SHEET 1

REVISION 0	DATE 09-23-2022
CCR LF PERMIT APPLICATION [BY HHNT, INC.]	

BY	CHK'D	CIVIL APPR	ELECT APPR	I/C APPR	MECH APPR	DISC MGR
ANR	RBL		☒	☒	☒	☒

SCALE	DRAWING NUMBER	SHEET	CONT'D	REV
AS NOTED	**H1C11143**	1	FINAL	0

REVISION	DATE	REVISION	DATE	REVISION	DATE	REVISION	DATE	REVISION	DATE	REVISION	DATE

Acad2004 ANSI F: 40x28

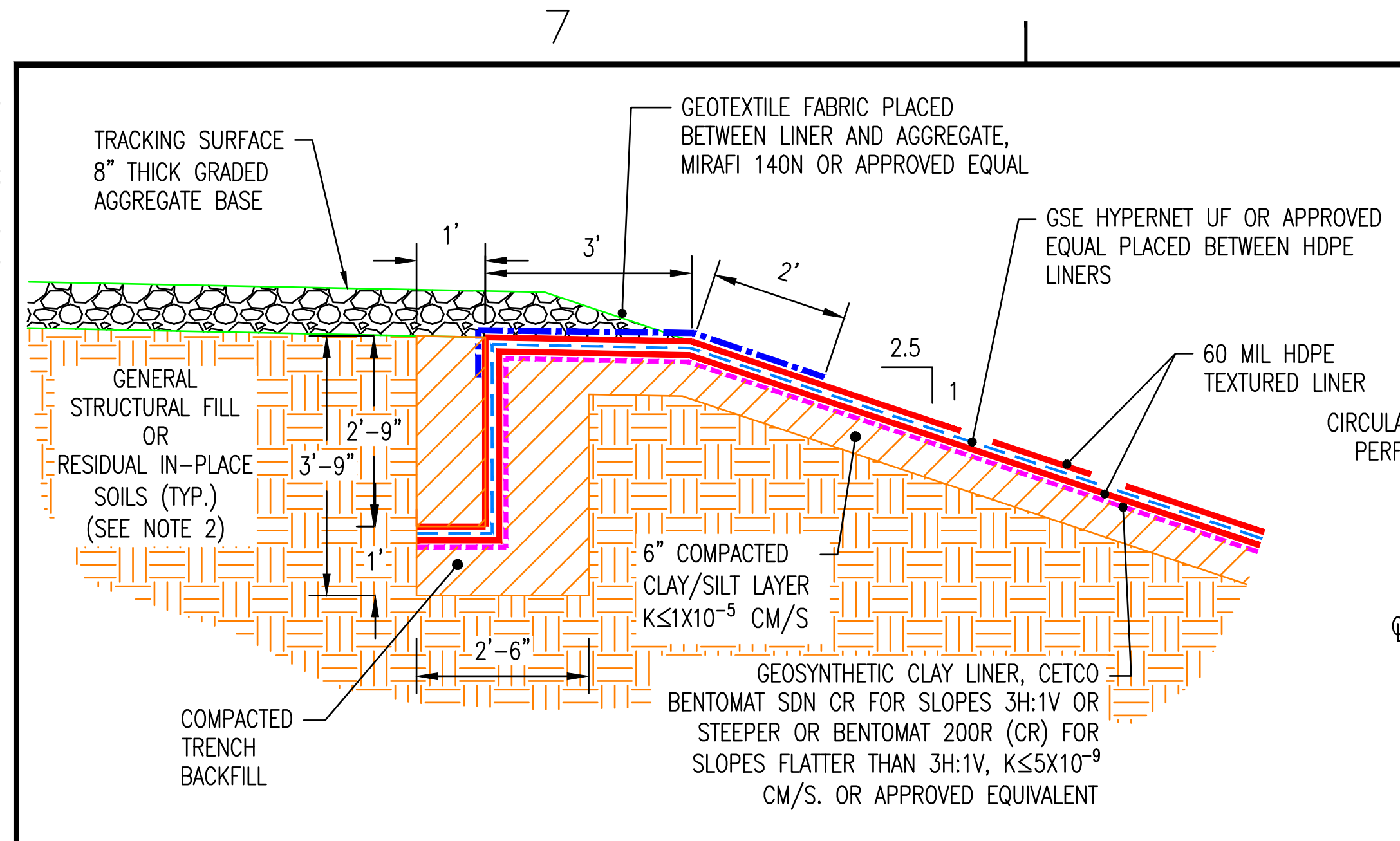
TRACKING SURFACE 8" THICK GRADED AGGREGATE BASE
GEOTEXTILE FABRIC PLACED BETWEEN LINER AND AGGREGATE, MIRAFI 140N OR APPROVED EQUAL
GSE HYPERNET UF OR APPROVED EQUAL PLACED BETWEEN HDPE LINERS
60 MIL HDPE TEXTURED LINER
GENERAL STRUCTURAL FILL OR RESIDUAL IN-PLACE SOILS (TYP.) (SEE NOTE 2)
6" COMPACTED CLAY/SILT LAYER K≤1X10⁻⁵ CM/S
GEOSYNTHETIC CLAY LINER, CETCO BENTOMAT SDN CR FOR SLOPES 3H:1V OR STEEPER OR BENTOMAT 200R (CR) FOR SLOPES FLATTER THAN 3H:1V, K≤5X10⁻⁹ CM/S. OR APPROVED EQUIVALENT
COMPACTED TRENCH BACKFILL
1'
3'
2'
2.5
1
2'-9"
3'-9"
2'-6"

POND ANCHOR TRENCH DETAIL

N.T.S.

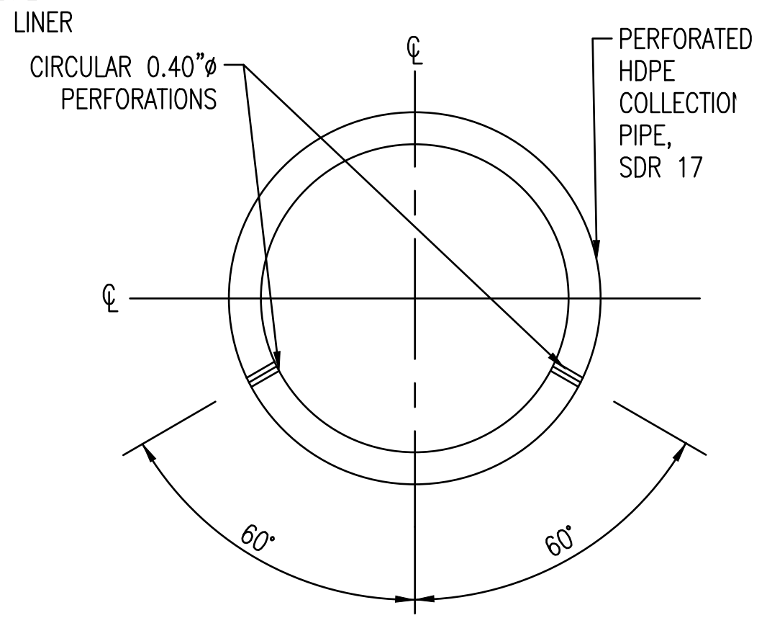
NOTE: 60 MIL HDPE LINER IS NOT TO BE PERMANENTLY ANCHORED AT TOP OF SLOPES UNTIL COVER HAS BEEN TEMPORARILY PLACED ON BOTTOM AND SIDES OF PERIMETER DITCH. LINER TO BE TEMPORARILY ANCHORED WITH SAND BAGS TO PREVENT MOVEMENT.
CIRCULAR 0.40"ø PERFORATIONS
PERFORATED HDPE COLLECTION PIPE, SDR 17
℄
60°
60°

NOTE: 18" DIA. PERFORATED PIPE TO HAVE AASHTO CLASS I PERFORATIONS–6 ROWS OF PERFORATIONS REQ'D PER FT-OF-PIPE (12 PER LF OF PIPE OR 24 TOTAL FOR 2' LONG PERFORATED SECTION)

PERFORATED PIPE DETAIL FOR POND SUMP

N.T.S.

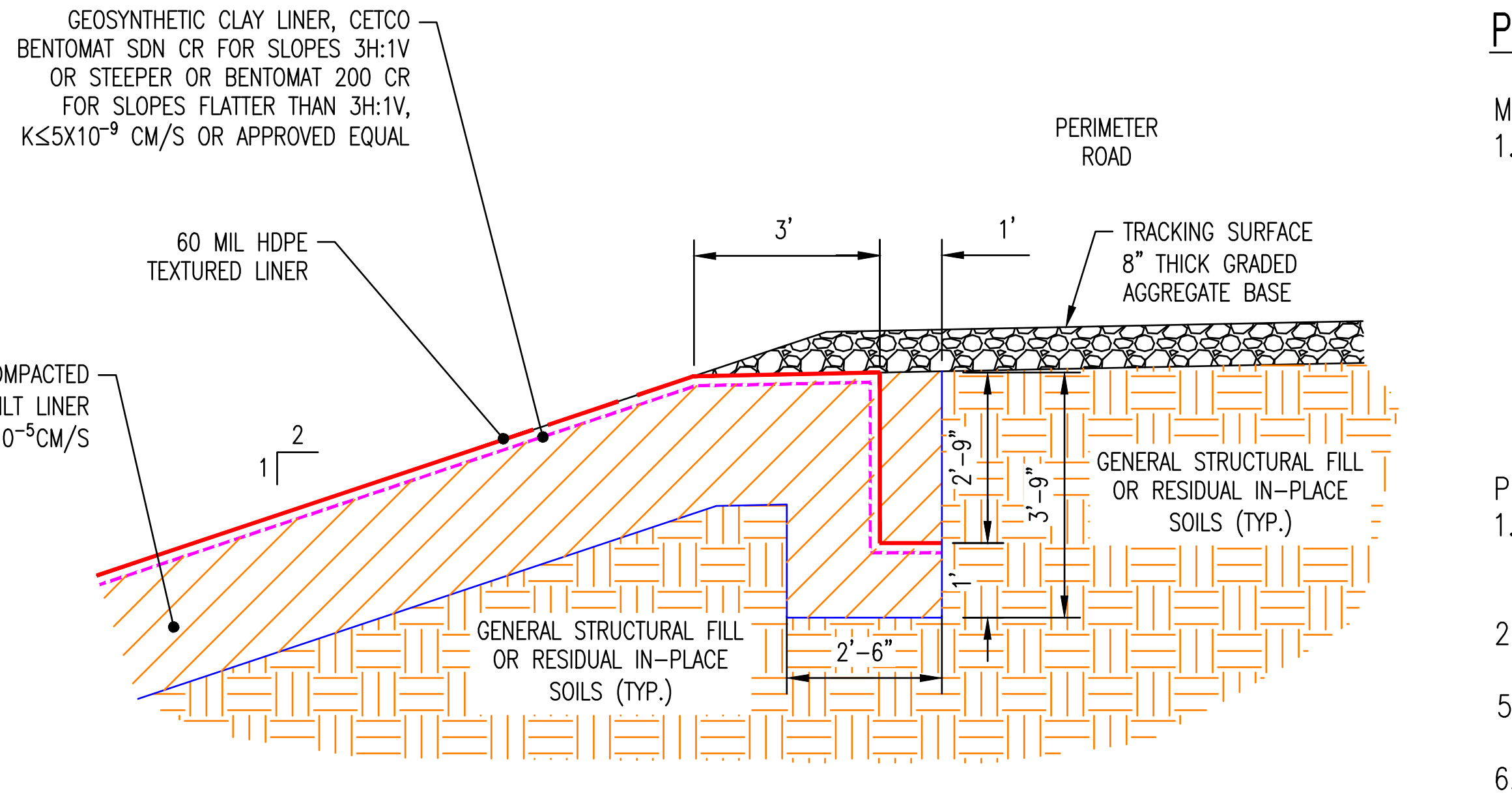
GEOSYNTHETIC CLAY LINER, CETCO BENTOMAT SDN CR FOR SLOPES 3H:1V OR STEEPER OR BENTOMAT 200 CR FOR SLOPES FLATTER THAN 3H:1V, K≤5X10⁻⁹ CM/S OR APPROVED EQUAL
PERIMETER ROAD
60 MIL HDPE TEXTURED LINER
TRACKING SURFACE 8" THICK GRADED AGGREGATE BASE
24" COMPACTED CLAY/SILT LINER K≤ 1X10⁻⁵CM/S
GENERAL STRUCTURAL FILL OR RESIDUAL IN-PLACE SOILS (TYP.)
3'
1'
2'-9"
3'-9"
2'-6"
2
1

PERIMETER DITCH WITH ANCHOR TRENCH DETAIL

N.T.S.

PERIMETER DITCH STONE INSTALLATION NOTES:

MATERIALS:

1. THE STONE COVER MATERIALS FOR THE EXPOSED HDPE GEOMEMBRANE ON THE BOTTOM OF THE PERIMETER DITCH SHALL CONSIST OF THE FOLLOWING:
   a. A SACRAFICIAL PIECE OF 60 MIL HDPE LINER SHALL BE PLACED IN THE ENTIRE DITCH SECTION FOR THE GYPSUM DISPOSAL CELLS (NOT INCLUDING CONCRETE DROP STRUCTURES). THIS MATERIAL SHALL EXTEND UP BOTH SIDE SLOPES AND TERMINATE AT A DISTANCE OF 2 FEET ABOVE THE STONE COVER.
   b. A NOMINAL 12-INCH TO 24-INCH THICK LAYER OF R-3 OR R-4 STONE (SEE SCHEDULE ABOVE FOR CLASS/LOCATIONS) ON THE DITCH BOTTOMS.

PLACEMENT:

1. AS MUCH AS PRACTICAL, THE GEOCOMPOSITE AND STONE COVER PLACEMENT SHALL BEGIN AT THE HIGH POINT OF THE PERIMETER DITCH AND PROGRESS IN THE DOWN-GRADIENT DIRECTION TO THE LOW POINT OF THE DITCH.
2. PRIOR TO PLACEMENT OF THE GEOCOMPOSITE, THE SURFACE OF THE HDPE LINER SHALL BE CLEARED OF ANY MUD, ROCKS, OR DELETERIOUS DEBRI.
5. PLACEMENT OF THE STONE MATERIALS SHALL BE SUCH THAT GEOCOMPOSITE MATERIAL AND GEOMEMBRANE ARE NOT DAMAGED.
6. AVOID STRETCHING AND TEARING OF THE GEOTEXTILE AND HDPE LINER AT ALL TIMES.
7. DO NOT DROP THE HEAVIER R-3 STONE FROM A HEIGHT OF MORE THAN 8 INCHES.
8. DO NOT DROP THE LIGHTER R2 STONE FROM A HEIGHT OF MORE THAN 12 INCHES.
9. DO NOT ALLOW STONE OR RIP RAP TO ROLL DOWN SLOPES.
10. CONTINUOUS FIELD MONITORING SHALL BE PROVIDED FOR EACH PIECE OF EQUIPMENT USED TO PLACE RIP RAP OR STONE MATERIAL TO ENSURE THAT THE GEOCOMPOSITE AND GEOMEMBRANE ARE NOT DAMAGED.

PERIMETER DITCH STONE COVER SCHEDULE

STRUCTURE	LOCATION/LENGTH* ALONG DITCH ℄	STONE SIZE (NSA) BOTTOM	NOTES
CONCRETE DITCH DROP STRUCTURES DOWNSTREAM SECTION	DOWNSTREAM DITCH 25 L.F.	R-4 2'	-PLACE 2 FT. THICK LAYER DOWNSTREAM AND TERMINATE AT 1' STONE DEPTH **
CROSSOVER PIPE @ SE CORNER CELL #3	UPSTREAM DITCH 10 L.F. DOWNSTREAM DITCH (SEE NOTE)	R-4 2'	-PLACE 1 FT. THK. LAYER UPSTREAM & TAPER ** -PLACE 2 FT. THICK LAYER DOWNSTREAM TO STR. #18
54" DIA. OUTFALL PIPES CELL #3 PERIM DT. STONE COVER AT INLET	UPSTREAM DITCH 30 L.F. DOWNSTREAM DITCH (SEE NOTE)	R-4 2'	-PLACE 2 FT. THK. LAYER UPSTREAM AND TERMINATE AT 1' THK. STONE SECTION -PLACE 2 FT. THK. LAYER DOWNSTREAM TO BERM
54" DIA. OUTFALL PIPES CELL #3 PERIM DT. STONE COVER AT OUTLET	UPSTREAM DITCH N/A DOWNSTREAM DITCH 50 L.F.	R-4 2'	-PLACE 2 FT. THK. LAYER DOWNSTREAM AND TERMINATE AT 1' THK. STONE SECTION
54" DIA. OUTFALL PIPES FROM 15' WIDE DITCH FROM CELL #3 TO CELL #2 PERIM. DT. STONE COVER AT INLET	UPSTREAM DITCH 50 L.F. DOWNSTREAM DITCH N/A	R-4 2'	-PLACE 2 FT. THK. LAYER UPSTREAM AND TERMINATE AT 1' THK. STONE SECTION
54" DIA. OUTFALL PIPES FROM 15' WIDE DITCH FROM CELL #3 TO CELL #2 PERIM. DT. STONE COVER AT OUTLET	UPSTREAM DITCH 30 L.F. DOWNSTREAM DITCH 50 L.F.	R-4 2'	-PLACE 2 FT. THK. LAYER UPSTREAM AND TERMINATE AT 1' THK. STONE SECTION -PLACE 2 FT. THK. LAYER DOWNSTREAM AND TERMINATE AT 1' THK. STONE SECTION
OUTFALL PIPES FROM PERIM. DITCHES TO NORTH SED. POND, STONE COVER AT INLET	UPSTREAM DITCH 30 L.F. DOWNSTREAM DITCH (SEE NOTE)	R-4 2'	-PLACE 2 FT. THK. LAYER UPSTREAM AND TERMINATE AT 1' TK. STONE SECTION -PLACE 2 FT. THK. LAYER DOWNSTREAM TO BERM
OUTFALL PIPES FROM PERIM. DITCHES TO SOUTH SED. POND, STONE COVER AT INLET	UPSTREAM DITCH 30 L.F. DOWNSTREAM DITCH (SEE NOTE)	R-4 2'	-PLACE 2 FT. THK. LAYER UPSTREAM AND TERMINATE AT 1 FT. THK. STONE SECTION -PLACE 2 FT. THK. LAYER DOWNSTREAM TO BERM

* DISTANCES ARE MEASURED ALONG THE PERIMETER DITCH CENTERLINE FROM THE CENTERLINE OF PIPE OR PIPES

** TAPER FOR STONE THICKNESS FROM 1 FOOT TO 2 FEET THICK SHOULD OCCUR IN DISTANCE OF APPROX. 10 FEET.

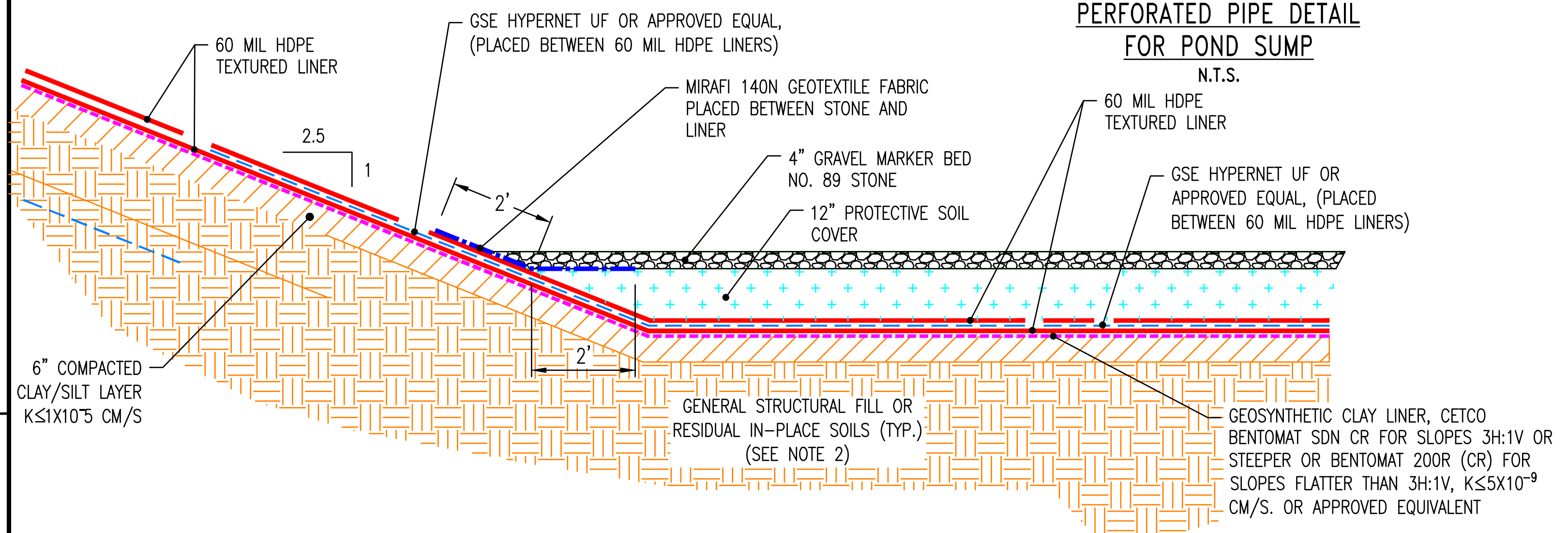
60 MIL HDPE TEXTURED LINER
GSE HYPERNET UF OR APPROVED EQUAL, (PLACED BETWEEN 60 MIL HDPE LINERS)
MIRAFI 140N GEOTEXTILE FABRIC PLACED BETWEEN STONE AND LINER
4" GRAVEL MARKER BED NO. 89 STONE
12" PROTECTIVE SOIL COVER
60 MIL HDPE TEXTURED LINER
GSE HYPERNET UF OR APPROVED EQUAL, (PLACED BETWEEN 60 MIL HDPE LINERS)
6" COMPACTED CLAY/SILT LAYER K≤1X10⁻⁵ CM/S
GENERAL STRUCTURAL FILL OR RESIDUAL IN-PLACE SOILS (TYP.) (SEE NOTE 2)
GEOSYNTHETIC CLAY LINER, CETCO BENTOMAT SDN CR FOR SLOPES 3H:1V OR STEEPER OR BENTOMAT 200R (CR) FOR SLOPES FLATTER THAN 3H:1V, K≤5X10⁻⁹ CM/S. OR APPROVED EQUIVALENT
2.5
1
2'
2'

TYPICAL POND DOUBLE LINER DETAIL

N.T.S.

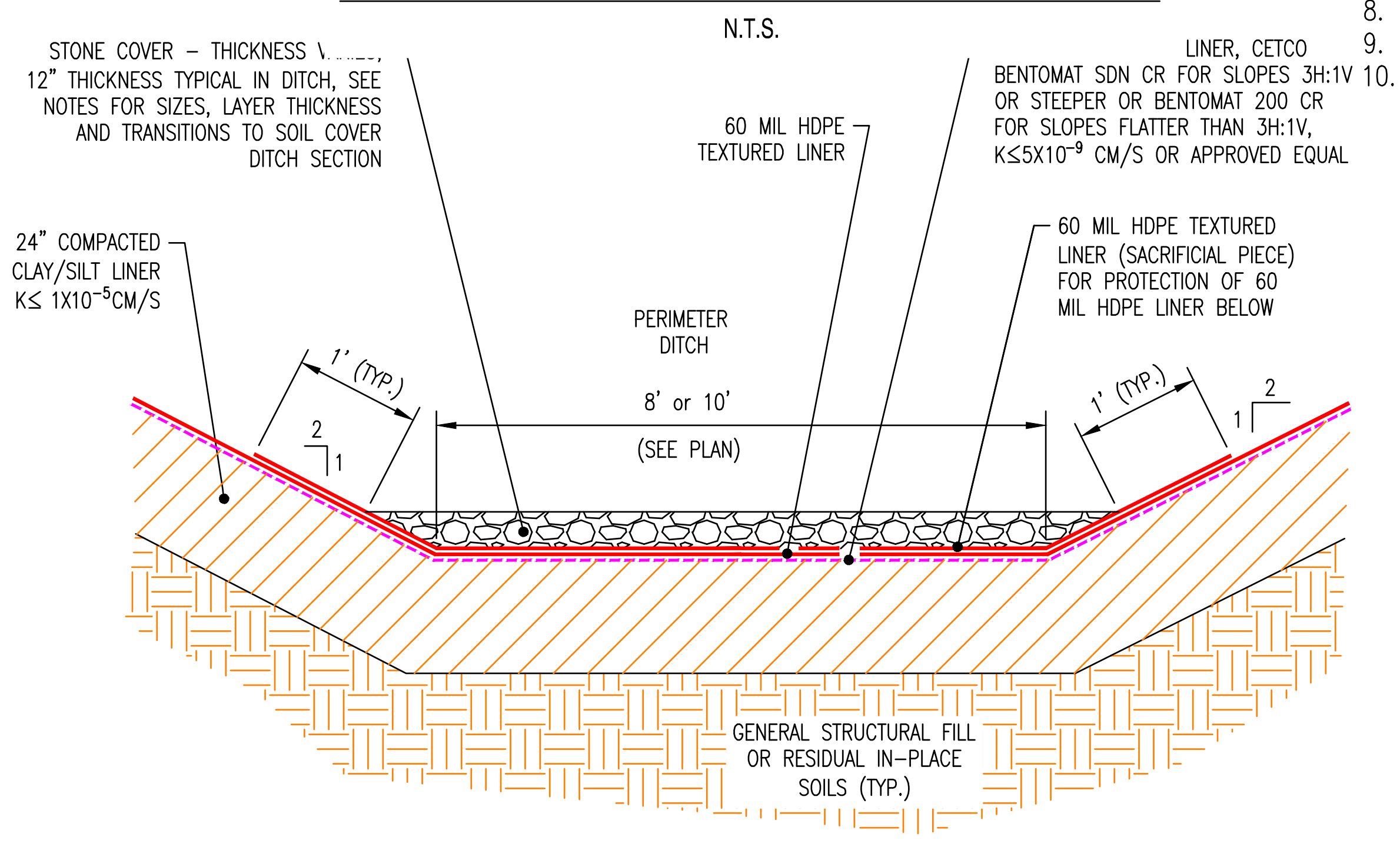
STONE COVER – THICKNESS VARIES 12" THICKNESS TYPICAL IN DITCH, SEE NOTES FOR SIZES, LAYER THICKNESS AND TRANSITIONS TO SOIL COVER DITCH SECTION
60 MIL HDPE TEXTURED LINER
LINER, CETCO BENTOMAT SDN CR FOR SLOPES 3H:1V OR STEEPER OR BENTOMAT 200 CR FOR SLOPES FLATTER THAN 3H:1V, K≤5X10⁻⁹ CM/S OR APPROVED EQUAL
60 MIL HDPE TEXTURED LINER (SACRIFICIAL PIECE) FOR PROTECTION OF 60 MIL HDPE LINER BELOW
24" COMPACTED CLAY/SILT LINER K≤ 1X10⁻⁵CM/S
PERIMETER DITCH
8' or 10'
(SEE PLAN)
1' (TYP.)
1' (TYP.)
2
1
2
1
GENERAL STRUCTURAL FILL OR RESIDUAL IN-PLACE SOILS (TYP.)

TYPICAL PERIMETER DITCH COMPOSITE LINER W/STONE COVER

N.T.S.

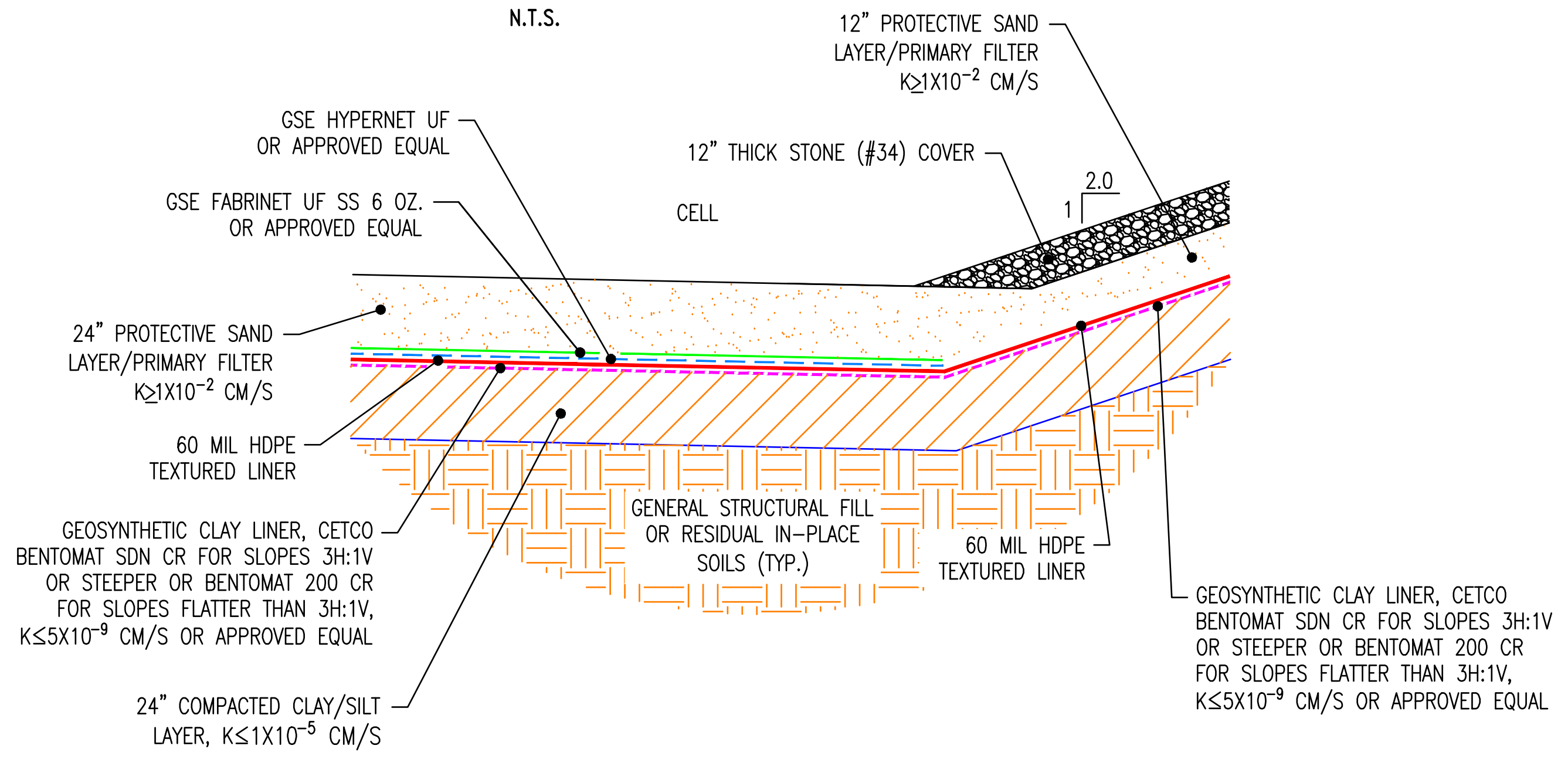
12" PROTECTIVE SAND LAYER/PRIMARY FILTER K≥1X10⁻² CM/S
GSE HYPERNET UF OR APPROVED EQUAL
12" THICK STONE (#34) COVER
GSE FABRINET UF SS 6 OZ. OR APPROVED EQUAL
CELL
2.0
1
24" PROTECTIVE SAND LAYER/PRIMARY FILTER K≥1X10⁻² CM/S
60 MIL HDPE TEXTURED LINER
GENERAL STRUCTURAL FILL OR RESIDUAL IN-PLACE SOILS (TYP.)
60 MIL HDPE TEXTURED LINER
GEOSYNTHETIC CLAY LINER, CETCO BENTOMAT SDN CR FOR SLOPES 3H:1V OR STEEPER OR BENTOMAT 200 CR FOR SLOPES FLATTER THAN 3H:1V, K≤5X10⁻⁹ CM/S OR APPROVED EQUAL
GEOSYNTHETIC CLAY LINER, CETCO BENTOMAT SDN CR FOR SLOPES 3H:1V OR STEEPER OR BENTOMAT 200 CR FOR SLOPES FLATTER THAN 3H:1V, K≤5X10⁻⁹ CM/S OR APPROVED EQUAL
24" COMPACTED CLAY/SILT LAYER, K≤1X10⁻⁵ CM/S

TYPICAL COMPOSITE LINER DETAIL – CELLS 1, 2 & 3

N.T.S.

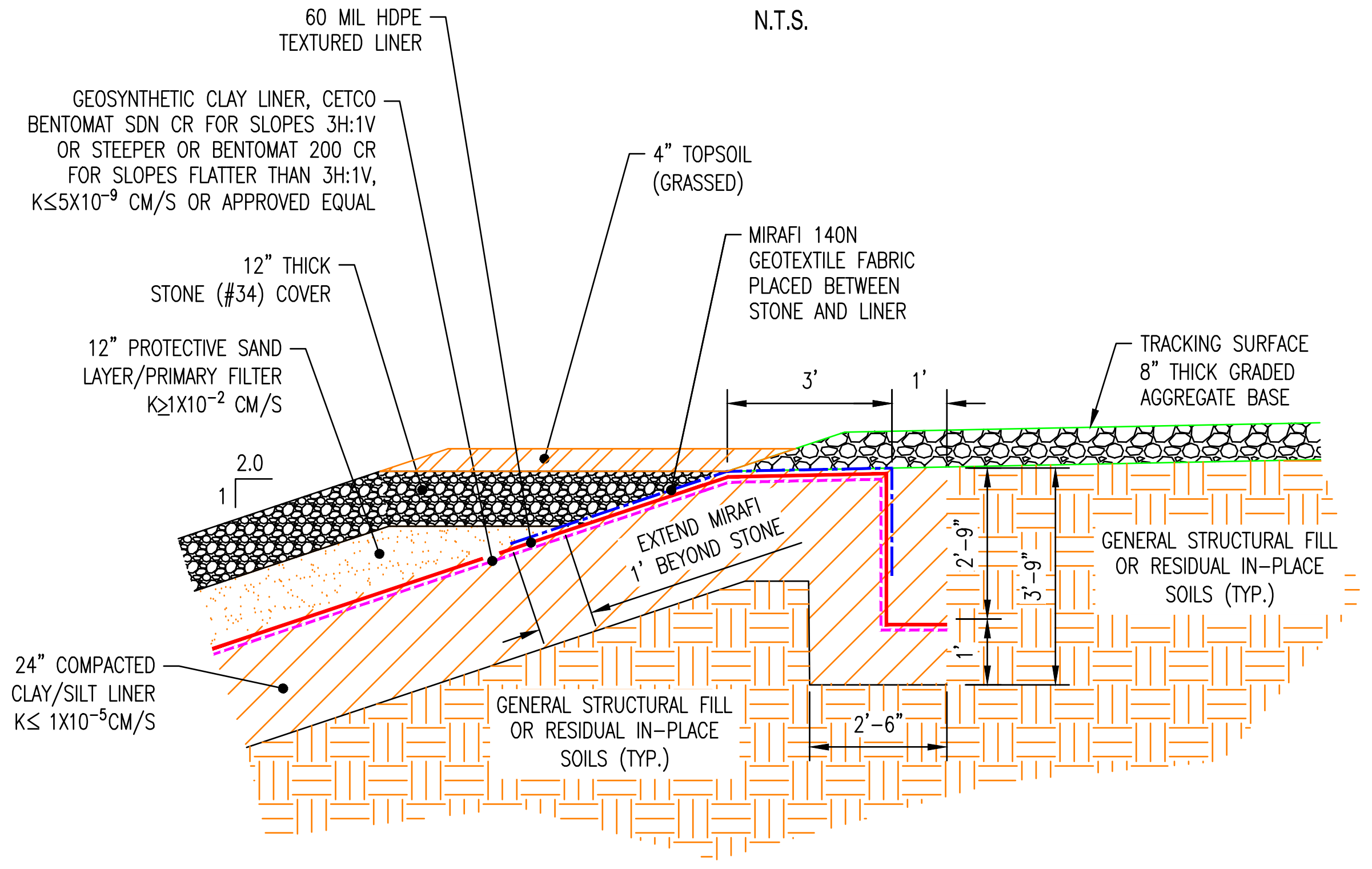
60 MIL HDPE TEXTURED LINER
GEOSYNTHETIC CLAY LINER, CETCO BENTOMAT SDN CR FOR SLOPES 3H:1V OR STEEPER OR BENTOMAT 200 CR FOR SLOPES FLATTER THAN 3H:1V, K≤5X10⁻⁹ CM/S OR APPROVED EQUAL
4" TOPSOIL (GRASSED)
MIRAFI 140N GEOTEXTILE FABRIC PLACED BETWEEN STONE AND LINER
12" THICK STONE (#34) COVER
12" PROTECTIVE SAND LAYER/PRIMARY FILTER K≥1X10⁻² CM/S
TRACKING SURFACE 8" THICK GRADED AGGREGATE BASE
3'
1'
2.0
1
EXTEND MIRAFI 1' BEYOND STONE
GENERAL STRUCTURAL FILL OR RESIDUAL IN-PLACE SOILS (TYP.)
2'-9"
3'-9"
2'-6"
24" COMPACTED CLAY/SILT LINER K≤ 1X10⁻⁵CM/S
GENERAL STRUCTURAL FILL OR RESIDUAL IN-PLACE SOILS (TYP.)

CELL ANCHOR TRENCH DETAIL

N.T.S.

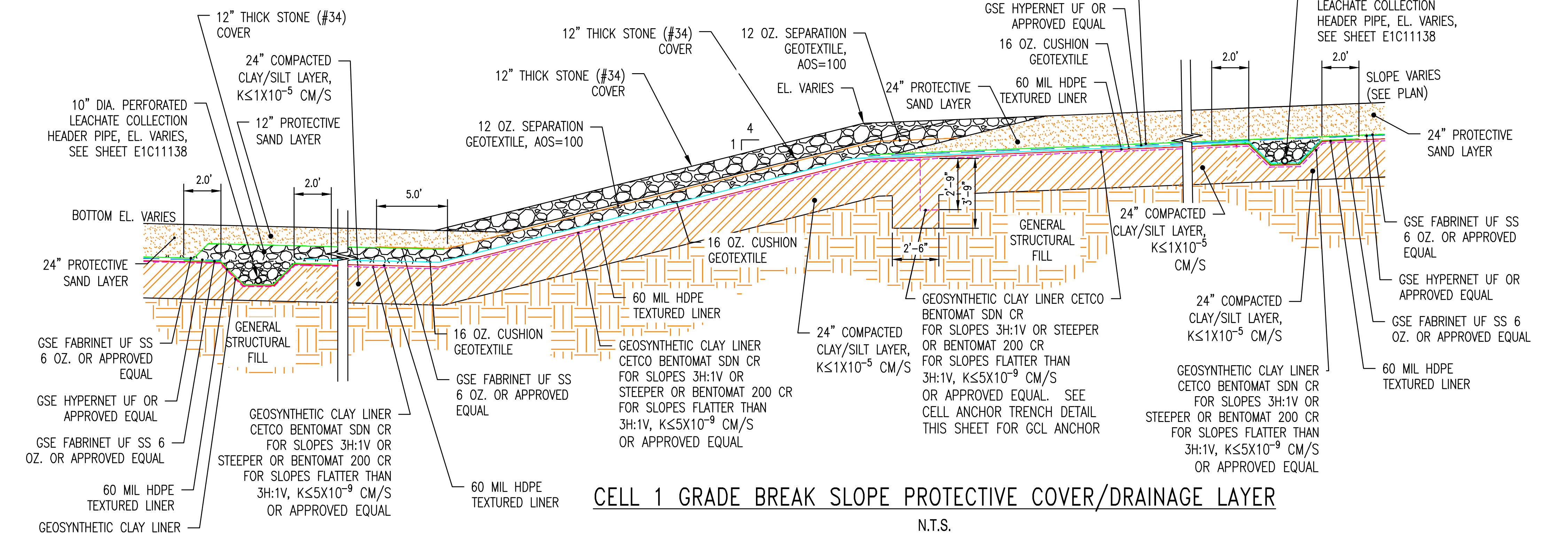
12" THICK STONE (#34) COVER
24" COMPACTED CLAY/SILT LAYER, K≤1X10⁻⁵ CM/S
12" PROTECTIVE SAND LAYER
12" THICK STONE (#34) COVER
12 OZ. SEPARATION GEOTEXTILE, AOS=100
12" THICK STONE (#34) COVER
12 OZ. SEPARATION GEOTEXTILE, AOS=100
EL. VARIES
24" PROTECTIVE SAND LAYER
GSE FABRINET UF SS 6 OZ. OR APPROVED EQUAL
GSE HYPERNET UF OR APPROVED EQUAL
16 OZ. CUSHION GEOTEXTILE
60 MIL HDPE TEXTURED LINER
10" DIA. PERFORATED LEACHATE COLLECTION HEADER PIPE, EL. VARIES, SEE SHEET E1C11138
2.0'
2.0'
SLOPE VARIES (SEE PLAN)
24" PROTECTIVE SAND LAYER
10" DIA. PERFORATED LEACHATE COLLECTION HEADER PIPE, EL. VARIES, SEE SHEET E1C11138
BOTTOM EL. VARIES
2.0'
2.0'
5.0'
4
1
24" PROTECTIVE SAND LAYER
16 OZ. CUSHION GEOTEXTILE
60 MIL HDPE TEXTURED LINER
GENERAL STRUCTURAL FILL
2'-6"
24" COMPACTED CLAY/SILT LAYER, K≤1X10⁻⁵ CM/S
GSE FABRINET UF SS 6 OZ. OR APPROVED EQUAL
GSE HYPERNET UF OR APPROVED EQUAL
GSE FABRINET UF SS 6 OZ. OR APPROVED EQUAL
GSE HYPERNET UF OR APPROVED EQUAL
GSE FABRINET UF SS 6 OZ. OR APPROVED EQUAL
60 MIL HDPE TEXTURED LINER
GEOSYNTHETIC CLAY LINER CETCO BENTOMAT SDN CR FOR SLOPES 3H:1V OR STEEPER OR BENTOMAT 200 CR FOR SLOPES FLATTER THAN 3H:1V, K≤5X10⁻⁹ CM/S OR APPROVED EQUAL
16 OZ. CUSHION GEOTEXTILE
GSE FABRINET UF SS 6 OZ. OR APPROVED
24" COMPACTED CLAY/SILT LAYER, K≤1X10⁻⁵ CM/S
GEOSYNTHETIC CLAY LINER CETCO BENTOMAT SDN CR FOR SLOPES 3H:1V OR STEEPER OR BENTOMAT 200 CR FOR SLOPES FLATTER THAN 3H:1V, K≤5X10⁻⁹ CM/S OR APPROVED EQUAL. SEE CELL ANCHOR TRENCH DETAIL THIS SHEET FOR GCL ANCHOR
24" COMPACTED CLAY/SILT LAYER, K≤1X10⁻⁵ CM/S
GENERAL STRUCTURAL FILL
60 MIL HDPE TEXTURED LINER
GEOSYNTHETIC CLAY LINER CETCO BENTOMAT SDN CR FOR SLOPES 3H:1V OR STEEPER OR BENTOMAT 200 CR FOR SLOPES FLATTER THAN 3H:1V, K≤5X10⁻⁹ CM/S OR APPROVED EQUAL
60 MIL HDPE TEXTURED LINER
GEOSYNTHETIC CLAY LINER CETCO BENTOMAT SDN CR FOR SLOPES 3H:1V OR STEEPER OR BENTOMAT 200 CR FOR SLOPES FLATTER THAN 3H:1V, K≤5X10⁻⁹ CM/S OR APPROVED EQUAL

CELL 1 GRADE BREAK SLOPE PROTECTIVE COVER/DRAINAGE LAYER

N.T.S.

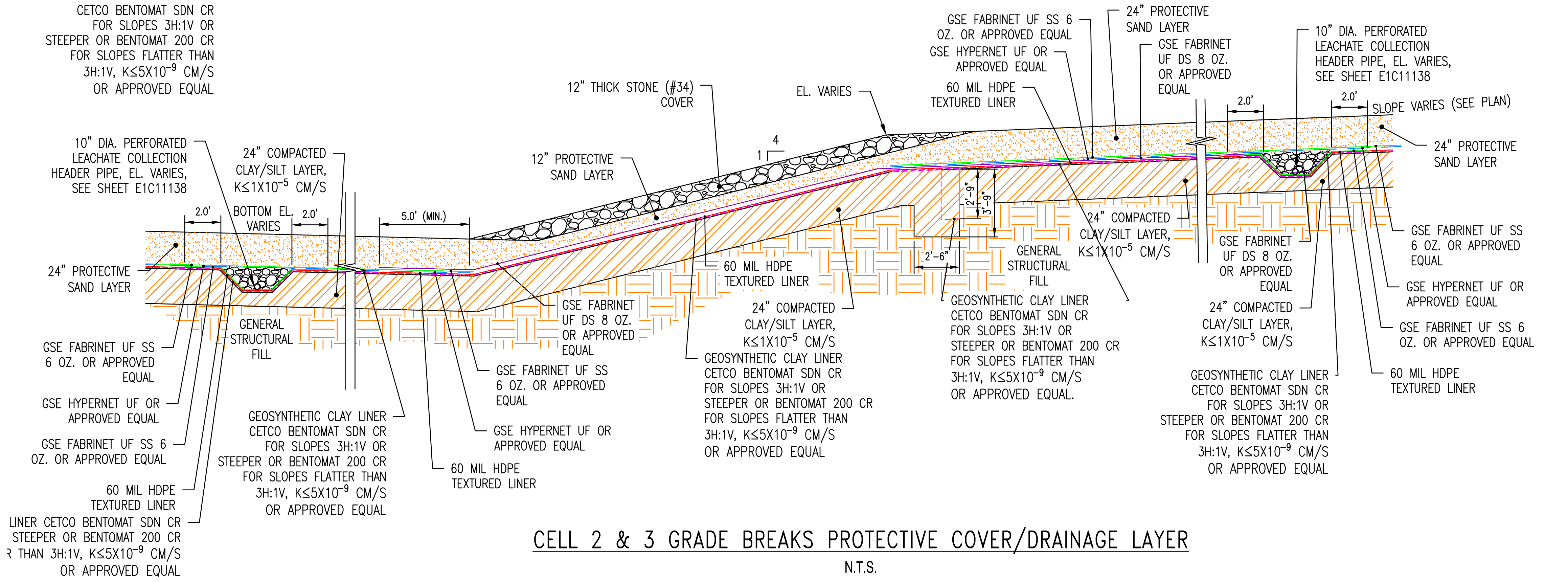
GSE FABRINET UF SS 6 OZ. OR APPROVED EQUAL
GSE HYPERNET UF OR APPROVED EQUAL
60 MIL HDPE TEXTURED LINER
24" PROTECTIVE SAND LAYER
GSE FABRINET UF DS 8 OZ. OR APPROVED EQUAL
10" DIA. PERFORATED LEACHATE COLLECTION HEADER PIPE, EL. VARIES, SEE SHEET E1C11138
2.0'
2.0'
SLOPE VARIES (SEE PLAN)
24" PROTECTIVE SAND LAYER
12" THICK STONE (#34) COVER
EL. VARIES
12" PROTECTIVE SAND LAYER
10" DIA. PERFORATED LEACHATE COLLECTION HEADER PIPE, EL. VARIES, SEE SHEET E1C11138
24" COMPACTED CLAY/SILT LAYER, K≤1X10⁻⁵ CM/S
BOTTOM EL. VARIES
2.0'
2.0'
5.0' (MIN.)
4
1
24" PROTECTIVE SAND LAYER
60 MIL HDPE TEXTURED LINER
2'-6"
GENERAL STRUCTURAL FILL
24" COMPACTED CLAY/SILT LAYER, K≤1X10⁻⁵ CM/S
GSE FABRINET UF DS 8 OZ. OR APPROVED EQUAL
GSE FABRINET UF SS 6 OZ. OR APPROVED EQUAL
GSE HYPERNET UF OR APPROVED EQUAL
GSE FABRINET UF SS 6 OZ. OR APPROVED EQUAL
GSE FABRINET UF DS 8 OZ. OR APPROVED EQUAL
GSE FABRINET UF SS 6 OZ. OR APPROVED EQUAL
GSE HYPERNET UF OR APPROVED EQUAL
GSE FABRINET UF SS 6 OZ. OR APPROVED EQUAL
24" COMPACTED CLAY/SILT LAYER, K≤1X10⁻⁵ CM/S
GENERAL STRUCTURAL FILL
GEOSYNTHETIC CLAY LINER CETCO BENTOMAT SDN CR FOR SLOPES 3H:1V OR STEEPER OR BENTOMAT 200 CR FOR SLOPES FLATTER THAN 3H:1V, K≤5X10⁻⁹ CM/S OR APPROVED EQUAL
GEOSYNTHETIC CLAY LINER CETCO BENTOMAT SDN CR FOR SLOPES 3H:1V OR STEEPER OR BENTOMAT 200 CR FOR SLOPES FLATTER THAN 3H:1V, K≤5X10⁻⁹ CM/S OR APPROVED EQUAL
GEOSYNTHETIC CLAY LINER CETCO BENTOMAT SDN CR FOR SLOPES 3H:1V OR STEEPER OR BENTOMAT 200 CR FOR SLOPES FLATTER THAN 3H:1V, K≤5X10⁻⁹ CM/S OR APPROVED EQUAL.
60 MIL HDPE TEXTURED LINER
60 MIL HDPE TEXTURED LINER
60 MIL HDPE TEXTURED LINER
LINER CETCO BENTOMAT SDN CR STEEPER OR BENTOMAT 200 CR THAN 3H:1V, K≤5X10⁻⁹ CM/S OR APPROVED EQUAL
GEOSYNTHETIC CLAY LINER CETCO BENTOMAT SDN CR FOR SLOPES 3H:1V OR STEEPER OR BENTOMAT 200 CR FOR SLOPES FLATTER THAN 3H:1V, K≤5X10⁻⁹ CM/S OR APPROVED EQUAL

CELL 2 & 3 GRADE BREAKS PROTECTIVE COVER/DRAINAGE LAYER

N.T.S.

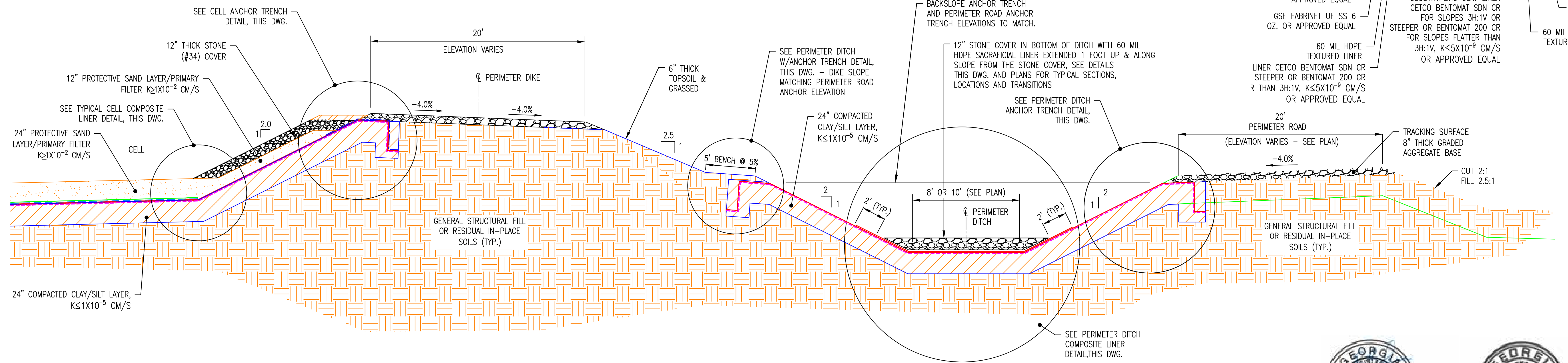
SEE CELL ANCHOR TRENCH DETAIL, THIS DWG.
12" THICK STONE (#34) COVER
12" PROTECTIVE SAND LAYER/PRIMARY FILTER K≥1X10⁻² CM/S
SEE TYPICAL CELL COMPOSITE LINER DETAIL, THIS DWG.
24" PROTECTIVE SAND LAYER/PRIMARY FILTER K≥1X10⁻² CM/S
CELL
2.0
1
20'
ELEVATION VARIES
℄ PERIMETER DIKE
-4.0%
-4.0%
6" THICK TOPSOIL & GRASSED
2.5
1
SEE PERIMETER DITCH W/ANCHOR TRENCH DETAIL, THIS DWG. - DIKE SLOPE MATCHING PERIMETER ROAD ANCHOR ELEVATION
24" COMPACTED CLAY/SILT LAYER, K≤1X10⁻⁵ CM/S
BACKSLOPE ANCHOR TRENCH AND PERIMETER ROAD ANCHOR TRENCH ELEVATIONS TO MATCH.
12" STONE COVER IN BOTTOM OF DITCH WITH 60 MIL HDPE SACRAFICIAL LINER EXTENDED 1 FOOT UP & ALONG SLOPE FROM THE STONE COVER, SEE DETAILS THIS DWG. AND PLANS FOR TYPICAL SECTIONS, LOCATIONS AND TRANSITIONS
SEE PERIMETER DITCH ANCHOR TRENCH DETAIL, THIS DWG.
20'
PERIMETER ROAD
(ELEVATION VARIES – SEE PLAN)
-4.0%
TRACKING SURFACE 8" THICK GRADED AGGREGATE BASE
CUT 2:1
FILL 2.5:1
5' BENCH @ 5%
8' OR 10' (SEE PLAN)
℄ PERIMETER DITCH
2' (TYP.)
2' (TYP.)
2
1
2
1
GENERAL STRUCTURAL FILL OR RESIDUAL IN-PLACE SOILS (TYP.)
GENERAL STRUCTURAL FILL OR RESIDUAL IN-PLACE SOILS (TYP.)
24" COMPACTED CLAY/SILT LAYER, K≤1X10⁻⁵ CM/S
SEE PERIMETER DITCH COMPOSITE LINER DETAIL,THIS DWG.

GEORGIA DEPARTMENT OF NATURAL RESOURCES
ENVIRONMENTAL PROTECTION DIVISION
Approved
Solid Waste Management Program
Approved By: Keith Stevens Digitally signed by Keith Stevens Date: 2022.10.25 08:59:48 -04'00'

NOTES:

1. SEE H1C11124 FOR GENERAL NOTES AND LEGEND.
2. THE SECTIONS SHOWN ON THIS DRAWING REPRESENT TYPICAL CONFIGURATIONS FOR THE CELLS, PERIMETER DITCHES, LEACHATE COLLECTION SYSTEM, AND SEDIMENT BASIN. ACTUAL CONDITIONS WILL VARY TO INCLUDE BOTH CUT AND FILL AREAS, THEREFORE THE SUBGRADE MATERIAL FOR THE CLAY LINER COULD CONSIST OF EITHER RESIDUAL, IN-PLACE SOILS OR GENERAL STRUCTURAL FILL. REFERENCE THE CONSTRUCTION SPECIFICATIONS FOR PROOF-ROLLING CRITERIA FOR IN-PLACE SOILS AND THE PLACEMENT AND COMPACTION CRITERIA FOR GENERAL STRUCTURAL FILL.

REFERENCES:

H1C11120	TITLE SHEET AND DRAWING INDEX
H1C11125	CELL NO. 1 SITE DEVELOPMENT, BASE GRADING PLAN
H1C11131	CELL NO. 2 SITE DEVELOPMENT, BASE GRADING PLAN
H1C11133	CELL NO. 3 SITE DEVELOPMENT, BASE GRADING PLAN
H1C11135	CELL NO. 1 SECTIONS THRU STACK
H1C11145	CELL NO. 1 THROUGH CELL NO. E, MISCELLANEOUS DETAILS, SHEET 3

NO. 27105 R. GRANT LANE 9/27/22

9/27/22

Southern Company Generation
Engineering and Construction Services
FOR
Georgia Power Company

PLANT WANSLEY
COAL COMBUSTION BY-PRODUCT DISPOSAL FACILITY
CELL 1 THROUGH CELL 3
MISCELLANEOUS DETAILS
SHEET 2

REVISION	DATE
REVISION 0	DATE 09-23-2022
CCR LF PERMIT APPLICATION [BY HHNT, INC.]	

BY	CHK'D	CIVIL APPR	ELECT APPR	I/C APPR	MECH APPR	DISC MGR
ANR	RBL		☒	☒	☒	☒

SCALE	DRAWING NUMBER	SHEET	CONT'D	REV
AS NOTED	**H1C11144**	1	FINAL	0

Acad2008 ANSI F: 40x28

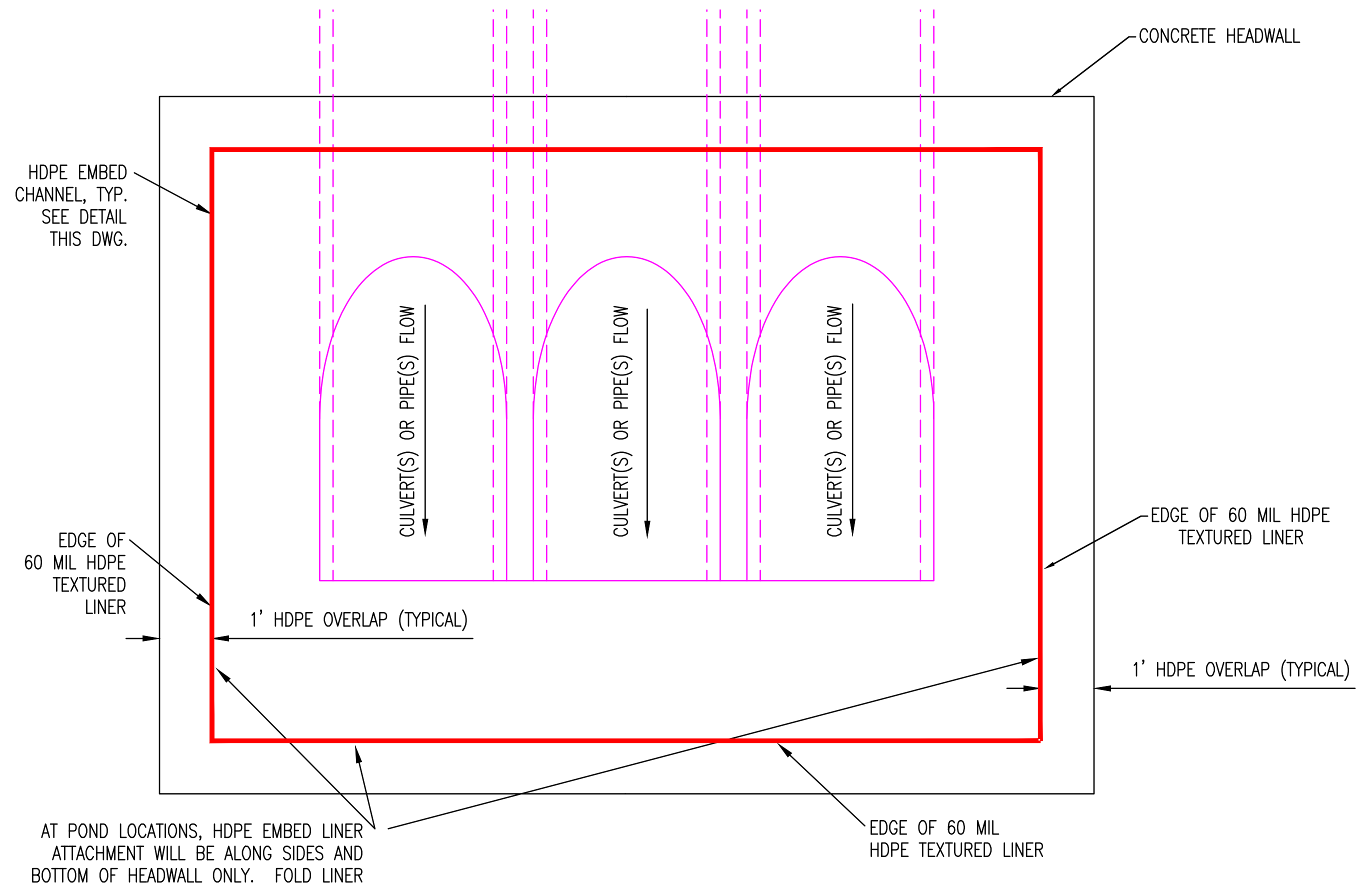
CONCRETE HEADWALL
HDPE EMBED CHANNEL, TYP. SEE DETAIL THIS DWG.
CULVERT(S) OR PIPE(S) FLOW
CULVERT(S) OR PIPE(S) FLOW
CULVERT(S) OR PIPE(S) FLOW
EDGE OF 60 MIL HDPE TEXTURED LINER
EDGE OF 60 MIL HDPE TEXTURED LINER
1' HDPE OVERLAP (TYPICAL)
1' HDPE OVERLAP (TYPICAL)
AT POND LOCATIONS, HDPE EMBED LINER ATTACHMENT WILL BE ALONG SIDES AND BOTTOM OF HEADWALL ONLY. FOLD LINER OVER TOP OF HEADWALL AT SIDES AND ANCHOR IN TRENCH.
EDGE OF 60 MIL HDPE TEXTURED LINER

MULTIPLE PIPES HEADWALL TYPICAL PLAN
N.T.S.

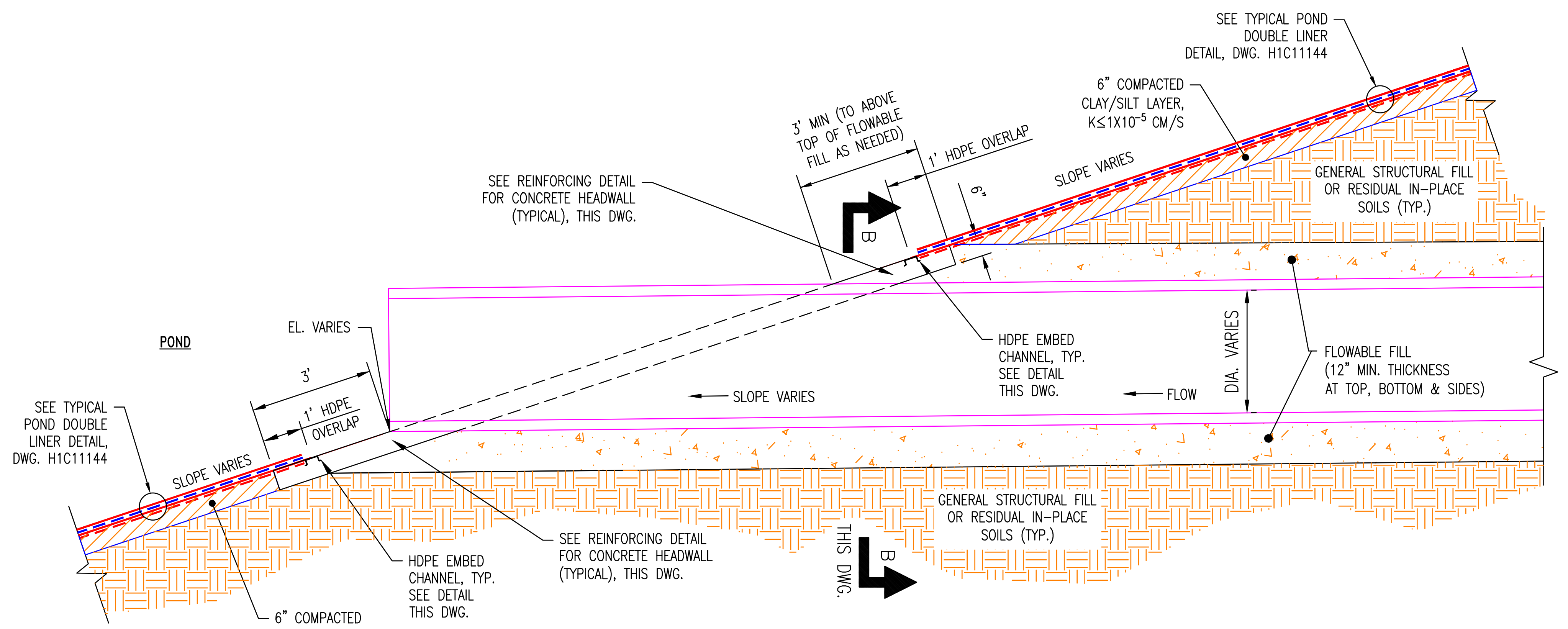
SEE TYPICAL POND DOUBLE LINER DETAIL, DWG. H1C11144
6" COMPACTED CLAY/SILT LAYER, K≤1X10⁻⁵ CM/S
3' MIN (TO ABOVE TOP OF FLOWABLE FILL AS NEEDED)
1' HDPE OVERLAP
SLOPE VARIES
GENERAL STRUCTURAL FILL OR RESIDUAL IN-PLACE SOILS (TYP.)
SEE REINFORCING DETAIL FOR CONCRETE HEADWALL (TYPICAL), THIS DWG.
B
6"
HDPE EMBED CHANNEL, TYP. SEE DETAIL THIS DWG.
FLOW
DIA. VARIES
FLOWABLE FILL (12" MIN. THICKNESS AT TOP, BOTTOM & SIDES)
POND
EL. VARIES
3'
1' HDPE OVERLAP
SEE TYPICAL POND DOUBLE LINER DETAIL, DWG. H1C11144
SLOPE VARIES
SLOPE VARIES
GENERAL STRUCTURAL FILL OR RESIDUAL IN-PLACE SOILS (TYP.)
SEE REINFORCING DETAIL FOR CONCRETE HEADWALL (TYPICAL), THIS DWG.
HDPE EMBED CHANNEL, TYP. SEE DETAIL THIS DWG.
6" COMPACTED CLAY/SILT LAYER, K≤1X10⁻⁵ CM/S
B THIS DWG.

PIPE EXIT CONCRETE HEADWALL AT SEDIMENT & RETURN WATER PONDS
TYPICAL SECTION
N.T.S.

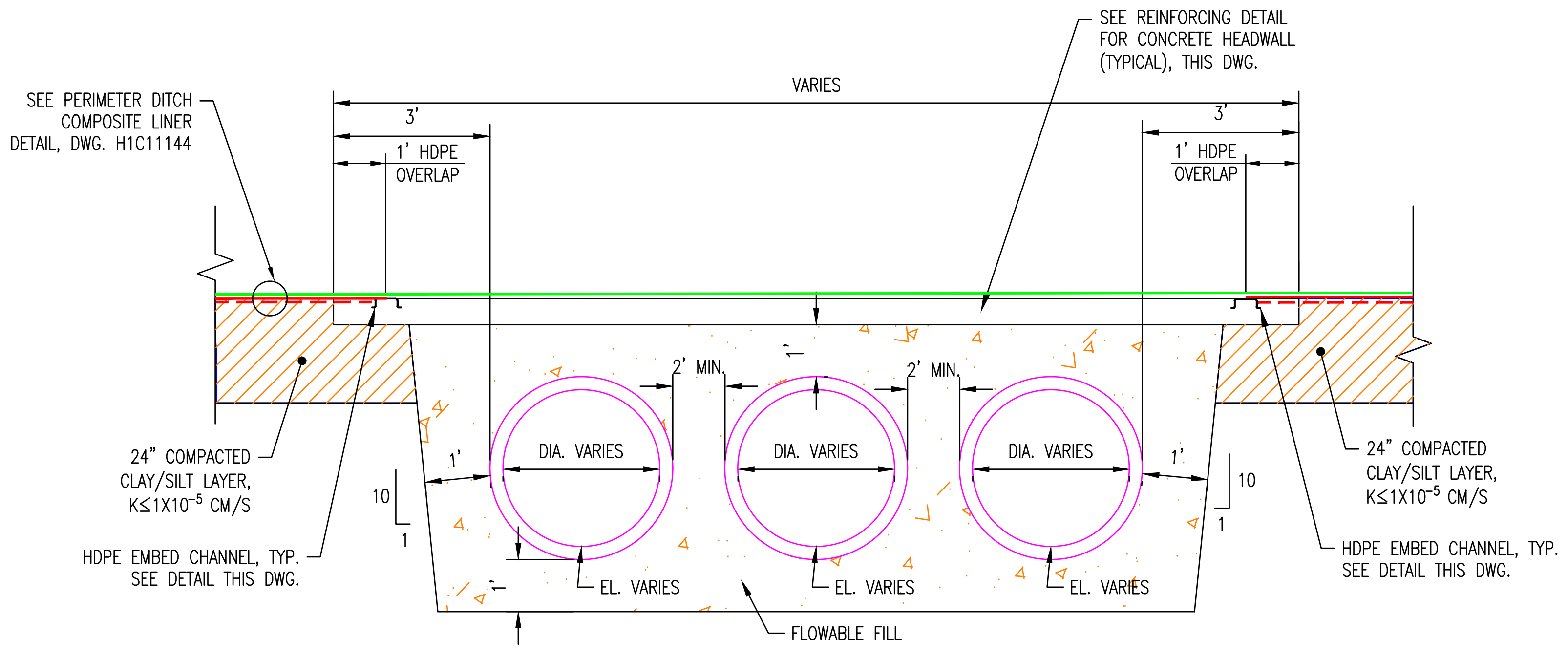
SEE REINFORCING DETAIL FOR CONCRETE HEADWALL (TYPICAL), THIS DWG.
SEE PERIMETER DITCH COMPOSITE LINER DETAIL, DWG. H1C11144
VARIES
3'
1' HDPE OVERLAP
3'
1' HDPE OVERLAP
2' MIN.
2' MIN.
DIA. VARIES
DIA. VARIES
DIA. VARIES
1'
1'
10
1
10
1
24" COMPACTED CLAY/SILT LAYER, K≤1X10⁻⁵ CM/S
24" COMPACTED CLAY/SILT LAYER, K≤1X10⁻⁵ CM/S
HDPE EMBED CHANNEL, TYP. SEE DETAIL THIS DWG.
HDPE EMBED CHANNEL, TYP. SEE DETAIL THIS DWG.
EL. VARIES
EL. VARIES
EL. VARIES
FLOWABLE FILL

SECTION A–A
TYPICAL MULTIPLE PIPE SECTION AT PERIMETER DITCHES
N.T.S.

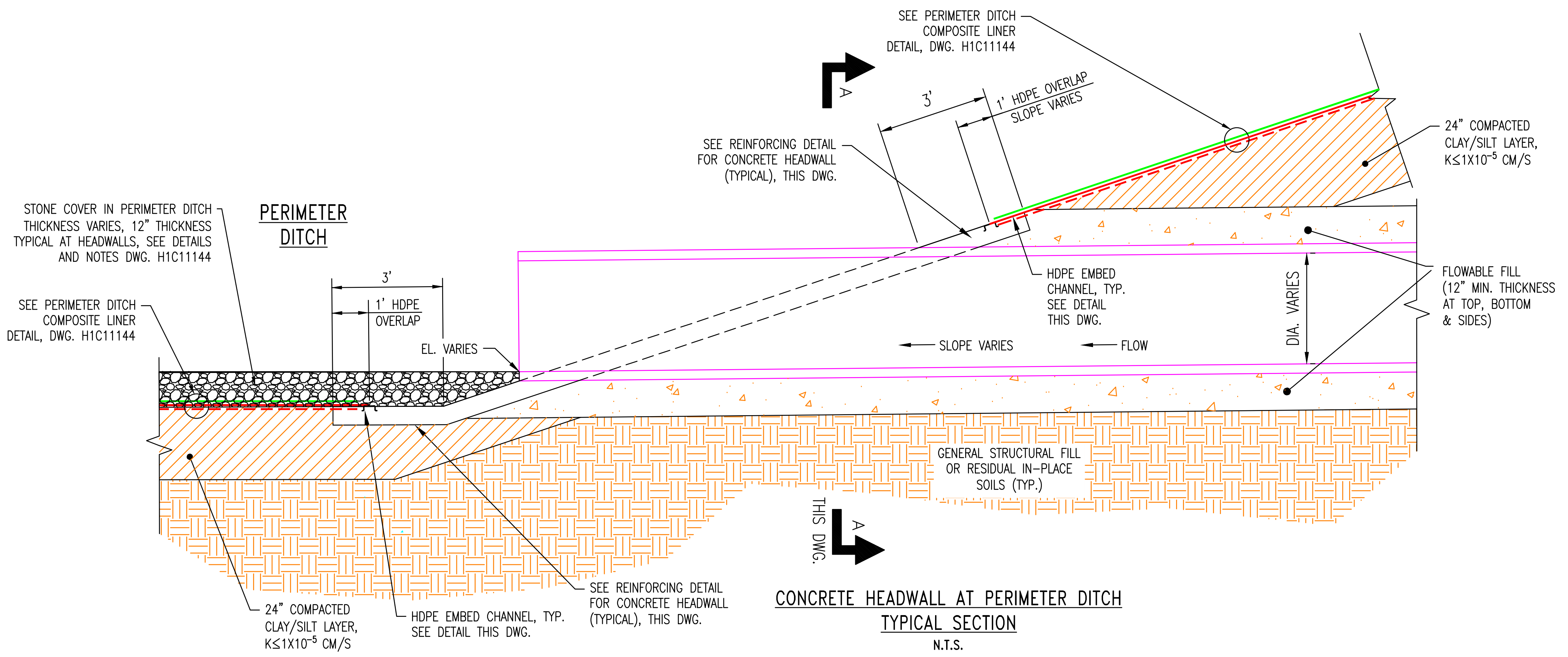
SEE PERIMETER DITCH COMPOSITE LINER DETAIL, DWG. H1C11144
A
3'
1' HDPE OVERLAP
SLOPE VARIES
24" COMPACTED CLAY/SILT LAYER, K≤1X10⁻⁵ CM/S
SEE REINFORCING DETAIL FOR CONCRETE HEADWALL (TYPICAL), THIS DWG.
STONE COVER IN PERIMETER DITCH THICKNESS VARIES, 12" THICKNESS TYPICAL AT HEADWALLS, SEE DETAILS AND NOTES DWG. H1C11144
PERIMETER DITCH
3'
1' HDPE OVERLAP
EL. VARIES
SEE PERIMETER DITCH COMPOSITE LINER DETAIL, DWG. H1C11144
HDPE EMBED CHANNEL, TYP. SEE DETAIL THIS DWG.
SLOPE VARIES
FLOW
DIA. VARIES
FLOWABLE FILL (12" MIN. THICKNESS AT TOP, BOTTOM & SIDES)
GENERAL STRUCTURAL FILL OR RESIDUAL IN-PLACE SOILS (TYP.)
A THIS DWG.
24" COMPACTED CLAY/SILT LAYER, K≤1X10⁻⁵ CM/S
HDPE EMBED CHANNEL, TYP. SEE DETAIL THIS DWG.
SEE REINFORCING DETAIL FOR CONCRETE HEADWALL (TYPICAL), THIS DWG.

CONCRETE HEADWALL AT PERIMETER DITCH
TYPICAL SECTION
N.T.S.

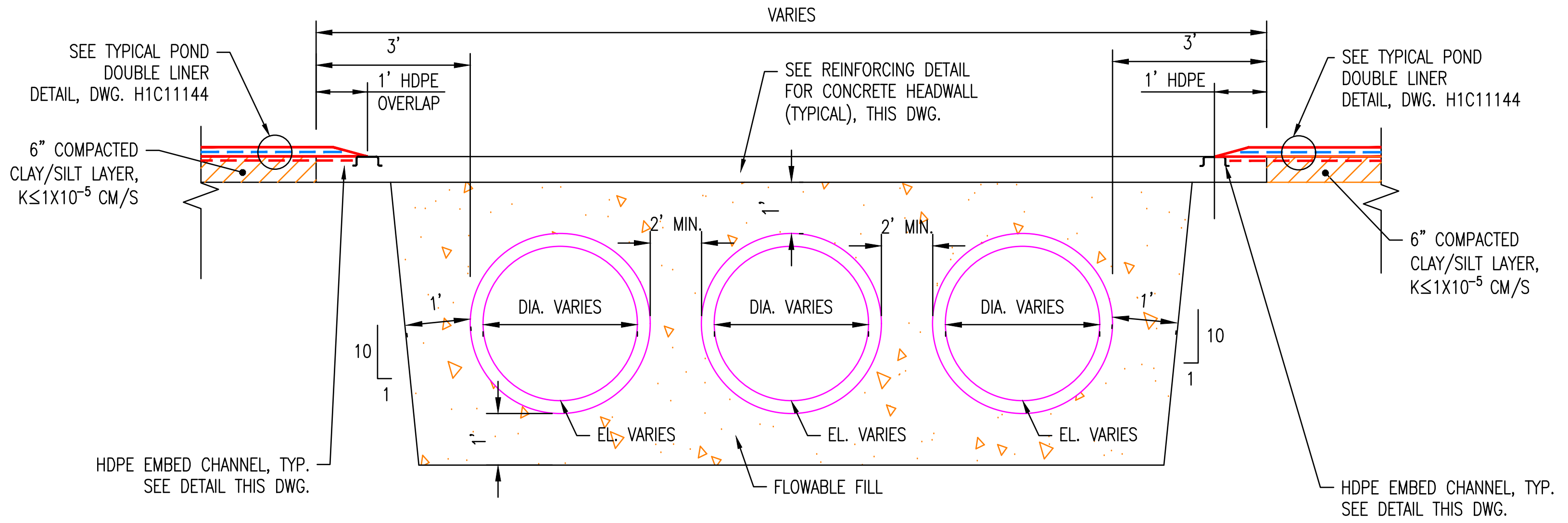
VARIES
3'
1' HDPE OVERLAP
3'
1' HDPE
SEE TYPICAL POND DOUBLE LINER DETAIL, DWG. H1C11144
SEE REINFORCING DETAIL FOR CONCRETE HEADWALL (TYPICAL), THIS DWG.
SEE TYPICAL POND DOUBLE LINER DETAIL, DWG. H1C11144
6" COMPACTED CLAY/SILT LAYER, K≤1X10⁻⁵ CM/S
6" COMPACTED CLAY/SILT LAYER, K≤1X10⁻⁵ CM/S
2' MIN.
2' MIN.
DIA. VARIES
DIA. VARIES
DIA. VARIES
1'
1'
10
1
10
1
EL. VARIES
EL. VARIES
EL. VARIES
HDPE EMBED CHANNEL, TYP. SEE DETAIL THIS DWG.
FLOWABLE FILL
HDPE EMBED CHANNEL, TYP. SEE DETAIL THIS DWG.

SECTION B–B
TYPICAL MULTIPLE PIPE SECTION AT PONDS
N.T.S.

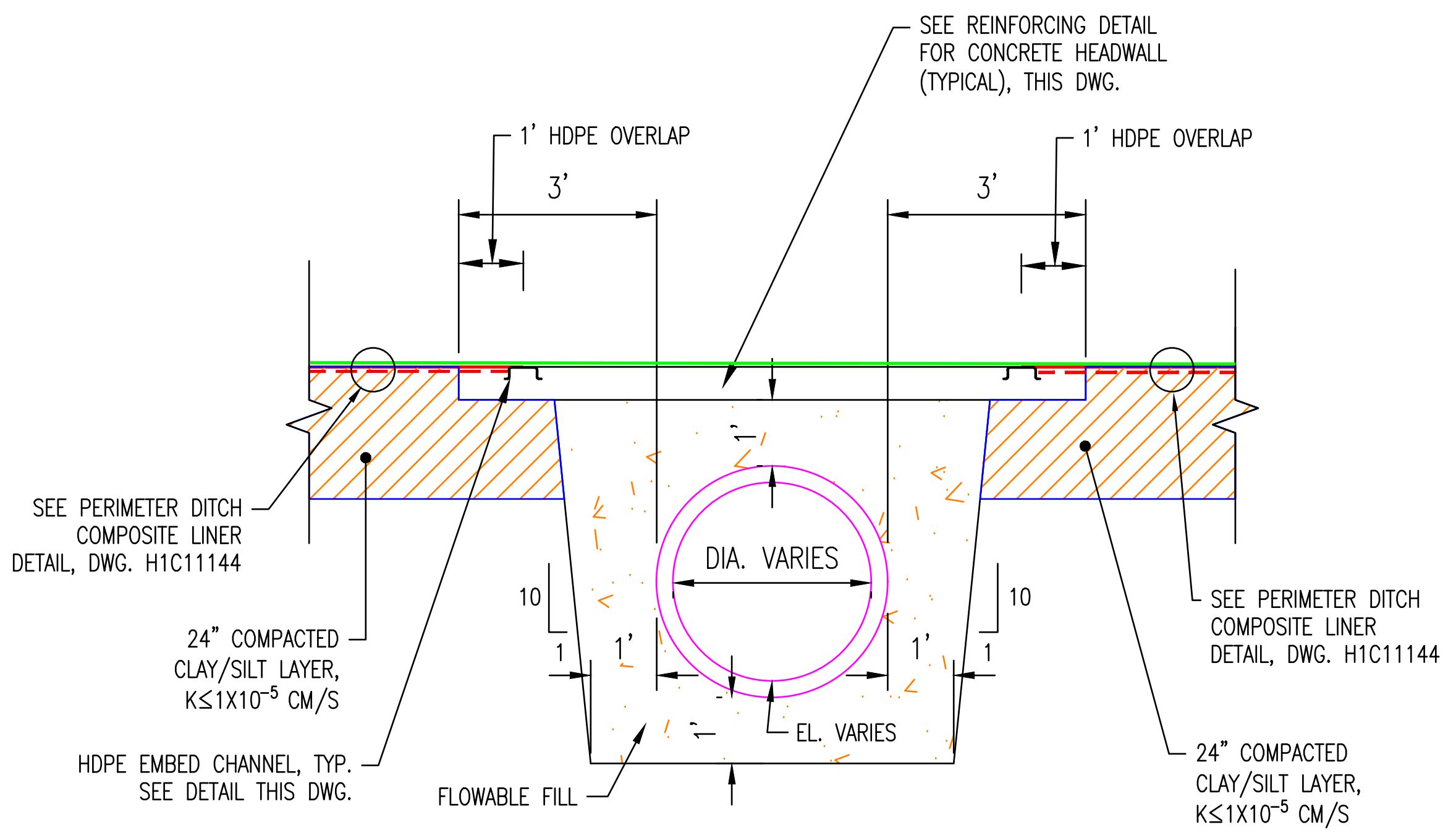
SEE REINFORCING DETAIL FOR CONCRETE HEADWALL (TYPICAL), THIS DWG.
1' HDPE OVERLAP
1' HDPE OVERLAP
3'
3'
DIA. VARIES
SEE PERIMETER DITCH COMPOSITE LINER DETAIL, DWG. H1C11144
SEE PERIMETER DITCH COMPOSITE LINER DETAIL, DWG. H1C11144
10
1
1'
1'
10
1
24" COMPACTED CLAY/SILT LAYER, K≤1X10⁻⁵ CM/S
24" COMPACTED CLAY/SILT LAYER, K≤1X10⁻⁵ CM/S
HDPE EMBED CHANNEL, TYP. SEE DETAIL THIS DWG.
EL. VARIES
FLOWABLE FILL

TYPICAL SINGLE PIPE SECTION AT PERIMETER DITCHES
N.T.S.

LINER NOTE:

COMPOSITE LINER COMPONENTS AND COMPONENT THICKNESSES VARY AT PIPE HEADWALLS DEPENDING ON LOCATION IN PERIMETER DITCHES OR PONDS. SEE COMPOSITE LINER DETAILS OF DITCHES AND PONDS, DWG. H1C11144.

REFERENCES:

H1C11120 TITLE SHEET AND DRAWING INDEX
H1C11125 CELL NO. 1, SITE DEVELOPMENT, BASE GRADING PLAN
H1C11131 CELL NO. 2 SITE DEVELOPMENT, BASE GRADING PLAN
H1C11133 CELL NO. 3 SITE DEVELOPMENT, BASE GRADING PLAN
H1C11144 CELL NO. 1 THROUGH CELL NO. 3, MISCELLANEOUS DETAILS, SHEET 2

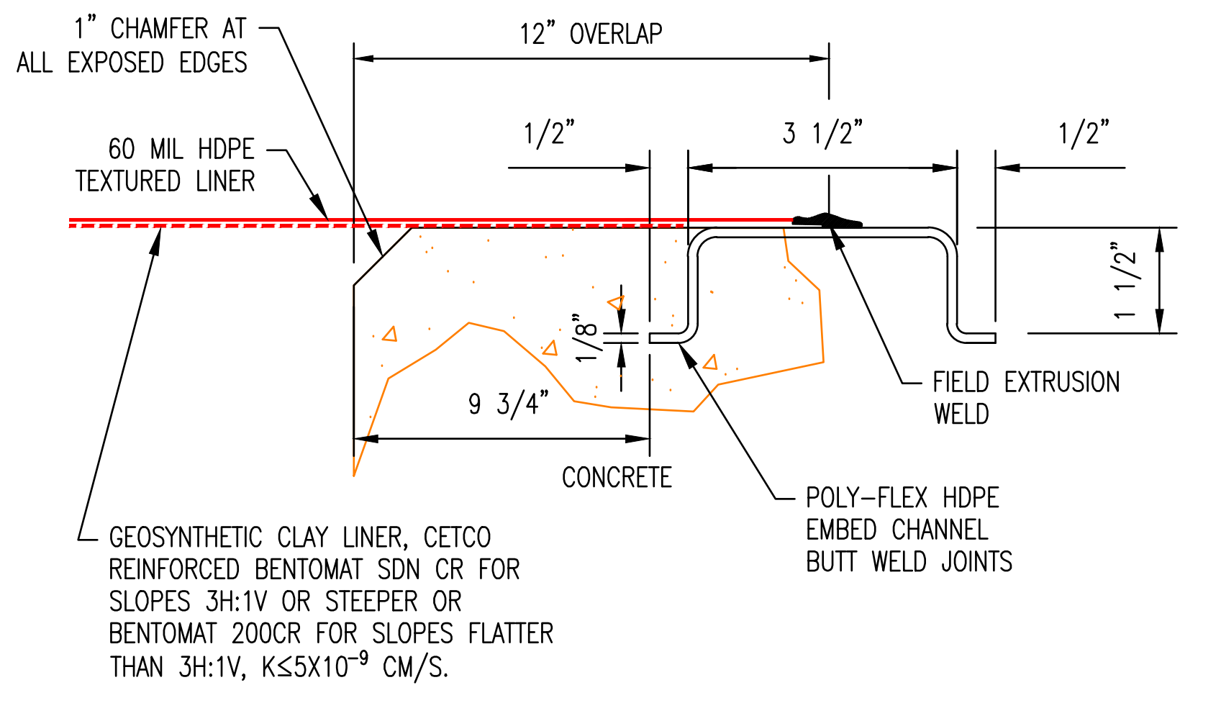
1" CHAMFER AT ALL EXPOSED EDGES
12" OVERLAP
60 MIL HDPE TEXTURED LINER
1/2"
3 1/2"
1/2"
1 1/2"
1/8"
9 3/4"
FIELD EXTRUSION WELD
CONCRETE
POLY-FLEX HDPE EMBED CHANNEL BUTT WELD JOINTS
GEOSYNTHETIC CLAY LINER, CETCO REINFORCED BENTOMAT SDN CR FOR SLOPES 3H:1V OR STEEPER OR BENTOMAT 200CR FOR SLOPES FLATTER THAN 3H:1V, K≤5X10⁻⁹ CM/S.

POLY–FLEX EMBED CHANNEL INSTALLATION DETAIL
N.T.S.

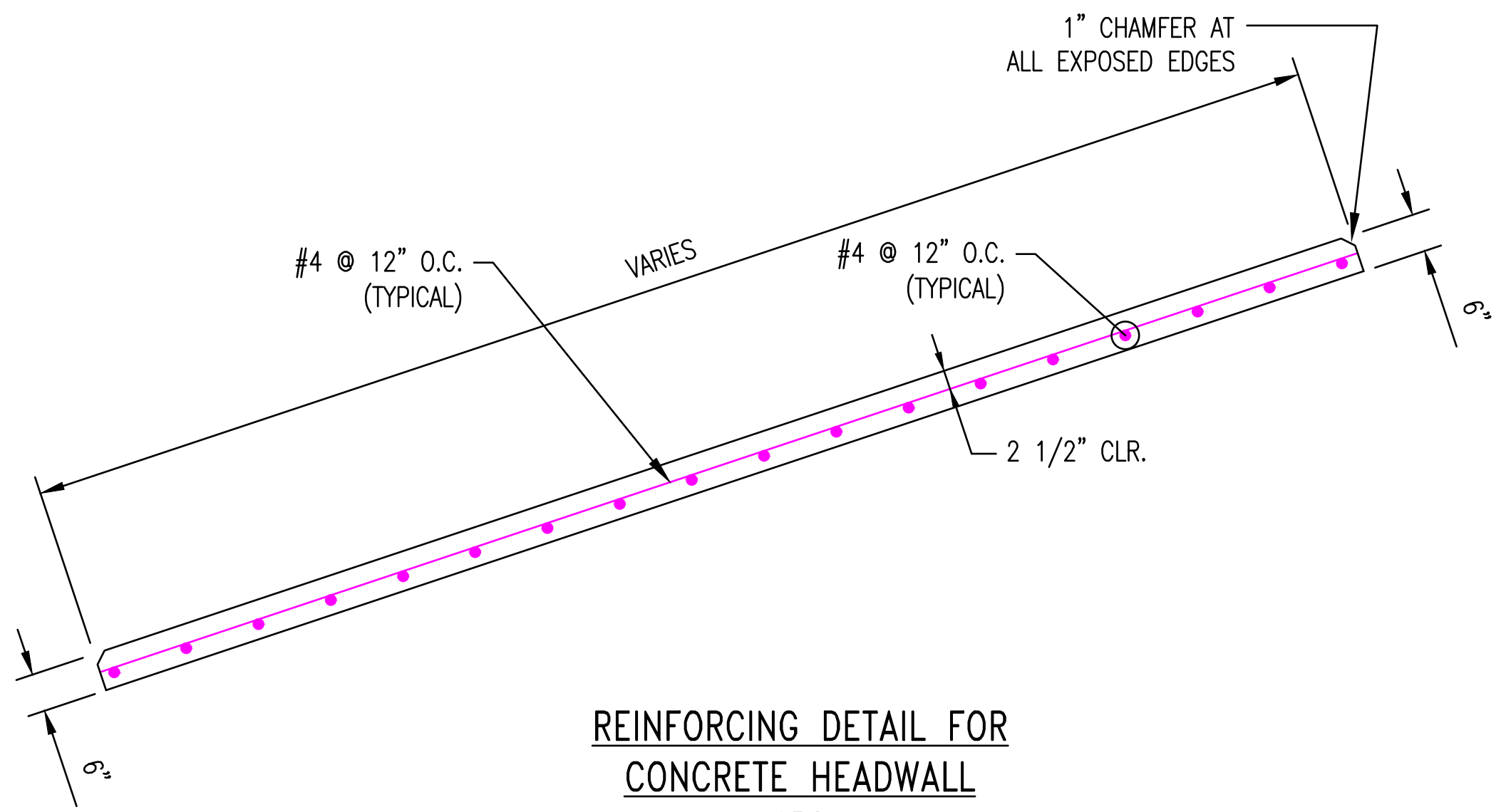
1" CHAMFER AT ALL EXPOSED EDGES
#4 @ 12" O.C. (TYPICAL)
VARIES
#4 @ 12" O.C. (TYPICAL)
2 1/2" CLR.
6"
6"

REINFORCING DETAIL FOR
CONCRETE HEADWALL
N.T.S.

GEORGIA
DEPARTMENT OF NATURAL RESOURCES
ENVIRONMENTAL PROTECTION DIVISION
Approved
Solid Waste Management Program
Approved By: Keith Stevens Digitally signed by Keith Stevens Date: 2022.10.25 08:59:48 -04'00'

NO. 27185 R. BRANT LANE 9/27/22

9/27/22

Southern Company Services, Inc.
Copyright© Southern Company Services, Inc. All Rights Reserved

Southern Company Generation
Engineering and Construction Services
FOR
Georgia Power Company

PLANT WANSLEY
COAL COMBUSTION BY–PRODUCT DISPOSAL FACILITY
CELL NO. 1 THROUGH CELL NO. 3
MISCELLANEOUS DETAILS
SHEET 3

REVISION	DATE	REVISION	DATE	REVISION	DATE	REVISION	DATE	REVISION	DATE	REVISION	DATE	REVISION 0	DATE 09-23-2022
												CCR LF PERMIT APPLICATION [BY HHNT, INC.]	

BY	CHK'D	CIVIL APPR	ELECT APPR	I/C APPR	MECH APPR	DISC MGR
ANR	RBL		☒	☒	☒	☒

SCALE	DRAWING NUMBER	SHEET	CONT'D	REV
AS NOTED	**H1C11145**	1	FINAL	0

Acad2008 ANSI F: 40x28

target ZERO Every day, every job, safely.

target ZERO Every day, every job, safely.

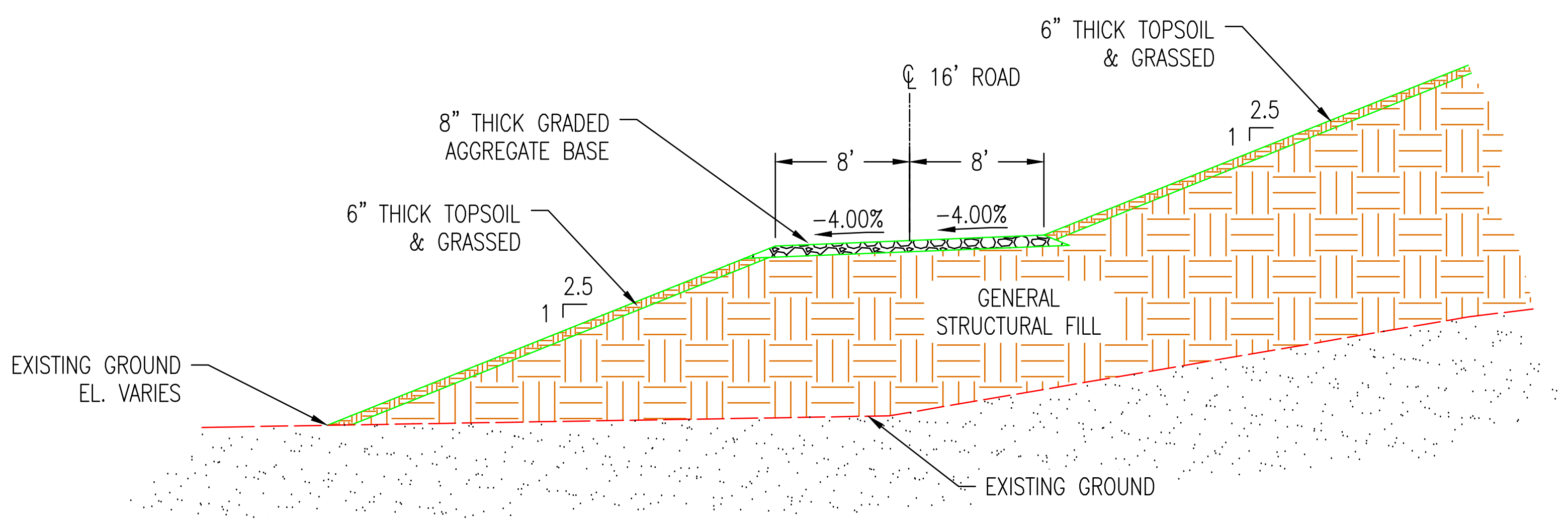
6" THICK TOPSOIL & GRASSED
℄ 16' ROAD
8" THICK GRADED AGGREGATE BASE
8'
8'
-4.00%
-4.00%
2.5
1
6" THICK TOPSOIL & GRASSED
2.5
1
GENERAL STRUCTURAL FILL
EXISTING GROUND EL. VARIES
EXISTING GROUND

PUMP ACCESS ROAD TYPICAL SECTION

NOT TO SCALE

(H1C11125, H1C11126, H1C11131, H1C11132, & H1C11133)

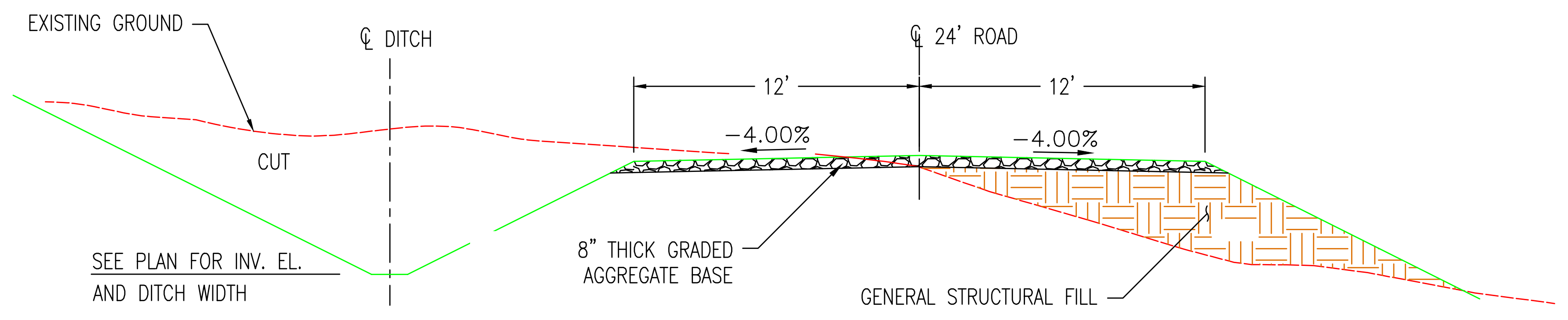
EXISTING GROUND
℄ DITCH
℄ 24' ROAD
12'
12'
-4.00%
-4.00%
CUT
SEE PLAN FOR INV. EL. AND DITCH WIDTH
8" THICK GRADED AGGREGATE BASE
GENERAL STRUCTURAL FILL

ACCESS ROAD TYPICAL SECTION

NOT TO SCALE

(H1C11125, H1C11126, H1C11131, H1C11132, & H1C11133)

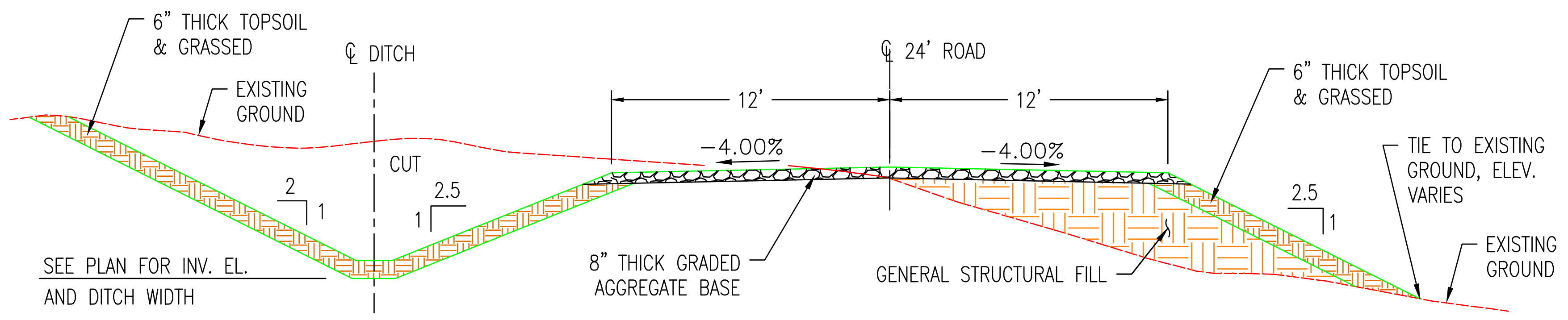
6" THICK TOPSOIL & GRASSED
EXISTING GROUND
℄ DITCH
℄ 24' ROAD
6" THICK TOPSOIL & GRASSED
12'
12'
-4.00%
-4.00%
CUT
2
1
2.5
1
2.5
1
TIE TO EXISTING GROUND, ELEV. VARIES
EXISTING GROUND
SEE PLAN FOR INV. EL. AND DITCH WIDTH
8" THICK GRADED AGGREGATE BASE
GENERAL STRUCTURAL FILL

ENTRANCE ROAD TYPICAL SECTION

NOT TO SCALE

(H1C11125, H1C11126, H1C11131, H1C11132, & H1C11133)

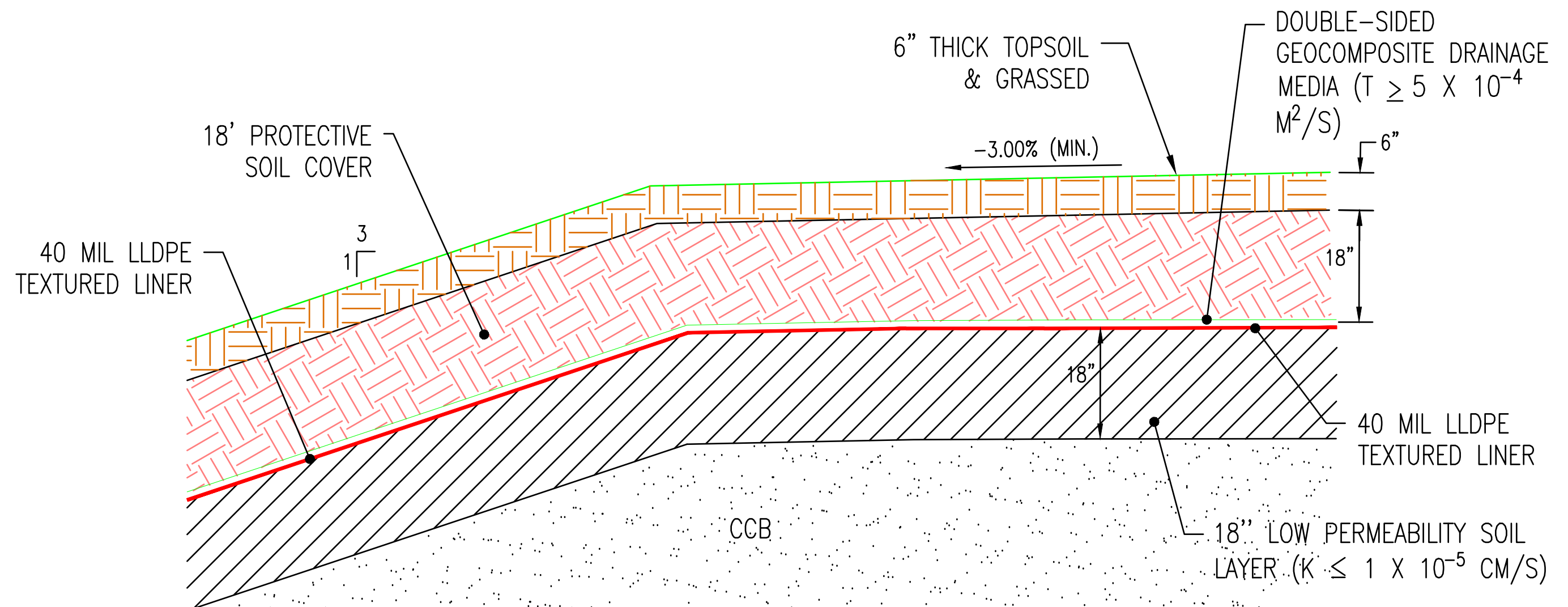
6" THICK TOPSOIL & GRASSED
DOUBLE-SIDED GEOCOMPOSITE DRAINAGE MEDIA (T ≥ 5 X 10⁻⁴ M²/S)
18' PROTECTIVE SOIL COVER
-3.00% (MIN.)
6"
40 MIL LLDPE TEXTURED LINER
3
1
18"
18"
40 MIL LLDPE TEXTURED LINER
CCB
18" LOW PERMEABILITY SOIL LAYER (K ≤ 1 X 10⁻⁵ CM/S)

FINAL COVER DETAIL

NOT TO SCALE

(H1C11130, H1C11132, & H1C11134)

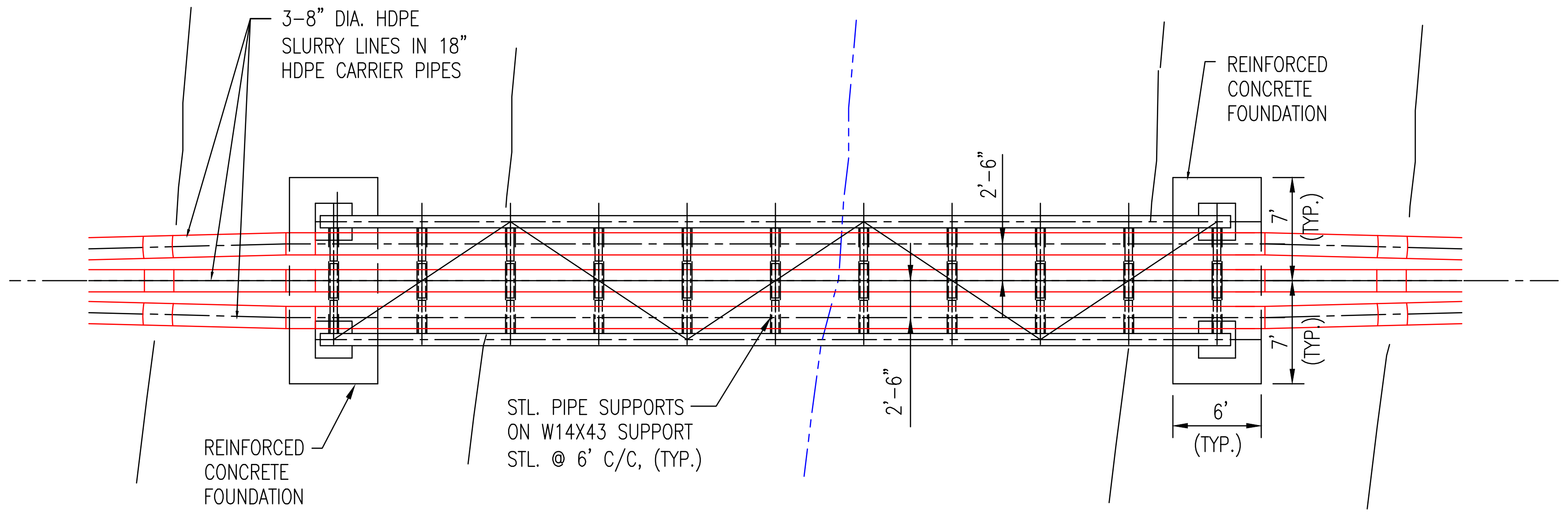
3-8" DIA. HDPE SLURRY LINES IN 18" HDPE CARRIER PIPES
REINFORCED CONCRETE FOUNDATION
2'-6"
7' (TYP.)
7' (TYP.)
2'-6"
REINFORCED CONCRETE FOUNDATION
STL. PIPE SUPPORTS ON W14X43 SUPPORT STL. @ 6' C/C, (TYP.)
6' (TYP.)

GYPSUM SLURRY STREAM CROSSINGS #1 & #2 – PLAN

NOT TO SCALE

(H1C11124 & H1C11126)

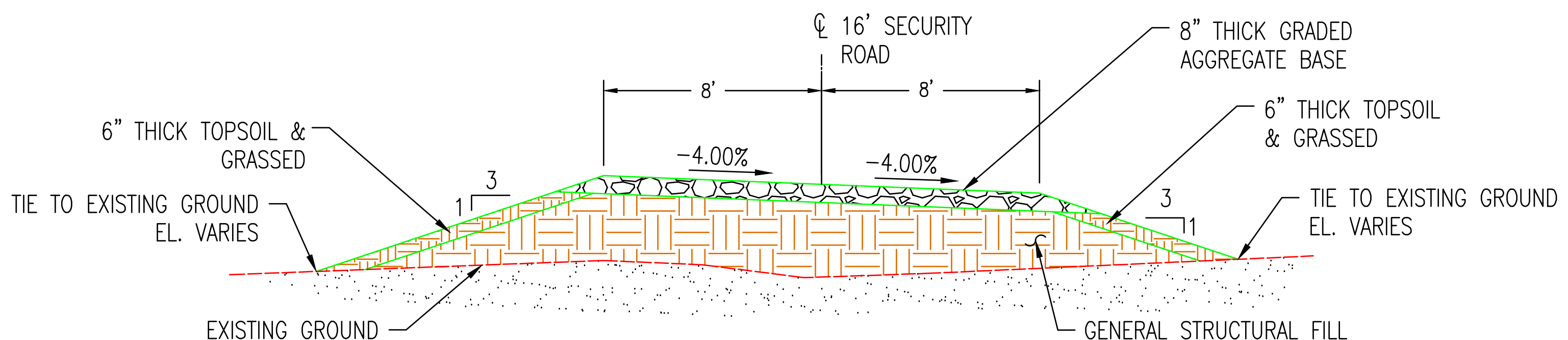
℄ 16' SECURITY ROAD
8" THICK GRADED AGGREGATE BASE
8'
8'
6" THICK TOPSOIL & GRASSED
6" THICK TOPSOIL & GRASSED
-4.00%
-4.00%
TIE TO EXISTING GROUND EL. VARIES
3
1
3
1
TIE TO EXISTING GROUND EL. VARIES
EXISTING GROUND
GENERAL STRUCTURAL FILL

SECURITY ROAD TYPICAL SECTION

NOT TO SCALE

(H1C11125, H1C11126, H1C11127, & H1C11128)

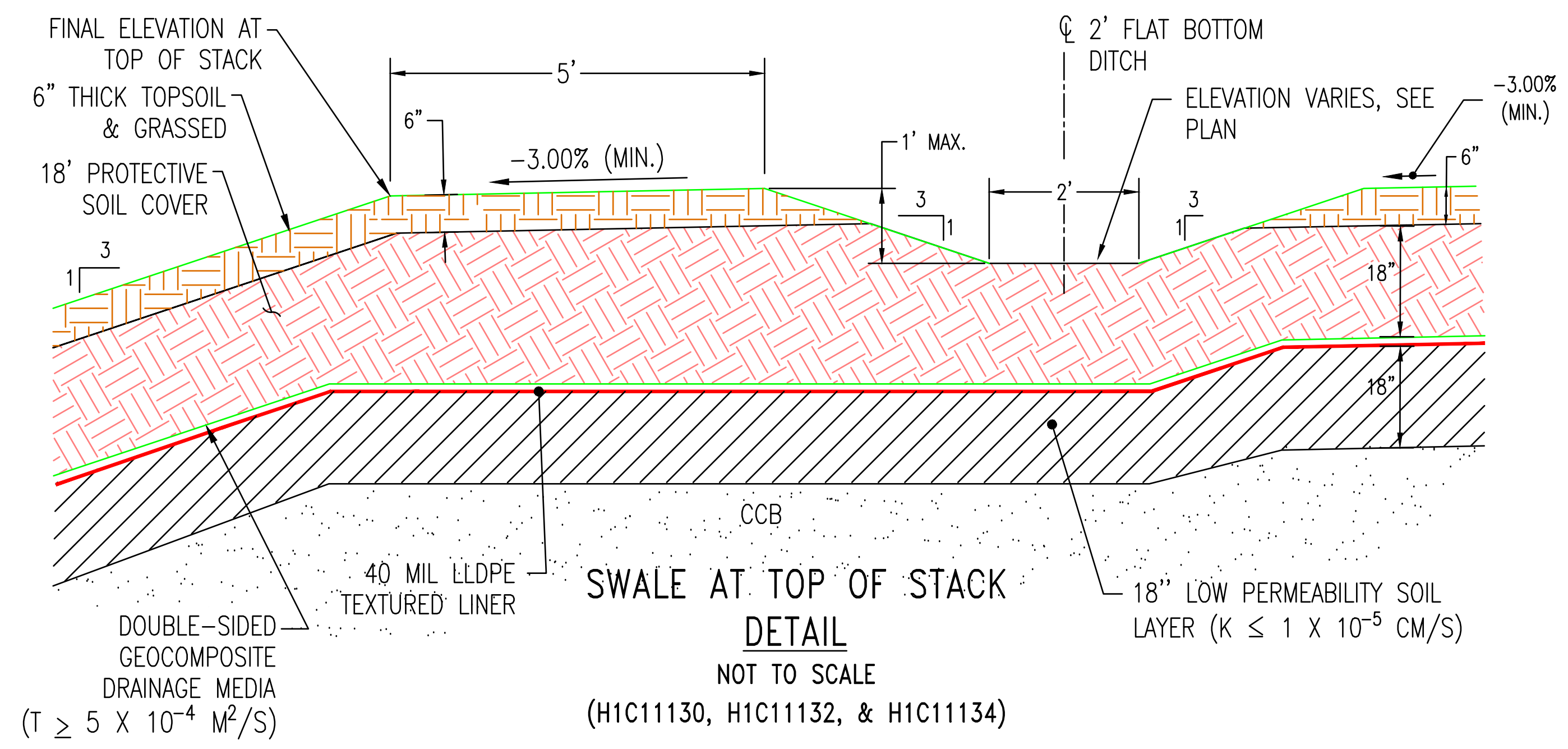
FINAL ELEVATION AT TOP OF STACK
6" THICK TOPSOIL & GRASSED
18' PROTECTIVE SOIL COVER
5'
6"
-3.00% (MIN.)
1' MAX.
℄ 2' FLAT BOTTOM DITCH
ELEVATION VARIES, SEE PLAN
-3.00% (MIN.)
6"
3
1
3
1
2'
3
1
18"
18"
CCB
40 MIL LLDPE TEXTURED LINER
DOUBLE-SIDED GEOCOMPOSITE DRAINAGE MEDIA (T ≥ 5 X 10⁻⁴ M²/S)
18" LOW PERMEABILITY SOIL LAYER (K ≤ 1 X 10⁻⁵ CM/S)

SWALE AT TOP OF STACK DETAIL

NOT TO SCALE

(H1C11130, H1C11132, & H1C11134)

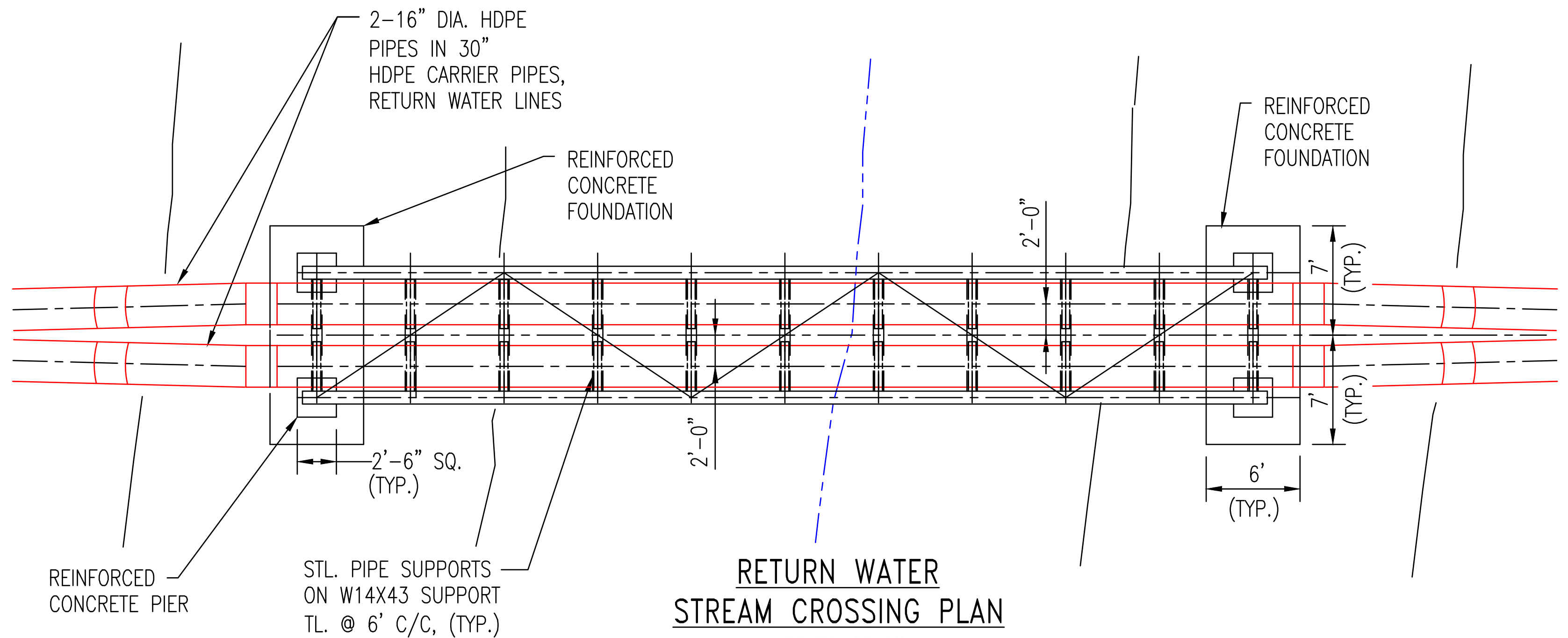
2-16" DIA. HDPE PIPES IN 30" HDPE CARRIER PIPES, RETURN WATER LINES
REINFORCED CONCRETE FOUNDATION
REINFORCED CONCRETE FOUNDATION
2'-0"
7' (TYP.)
7' (TYP.)
2'-0"
2'-6" SQ. (TYP.)
6' (TYP.)
REINFORCED CONCRETE PIER
STL. PIPE SUPPORTS ON W14X43 SUPPORT TL. @ 6' C/C, (TYP.)

RETURN WATER STREAM CROSSING PLAN

NOT TO SCALE

(H1C11124 & H1C11125)

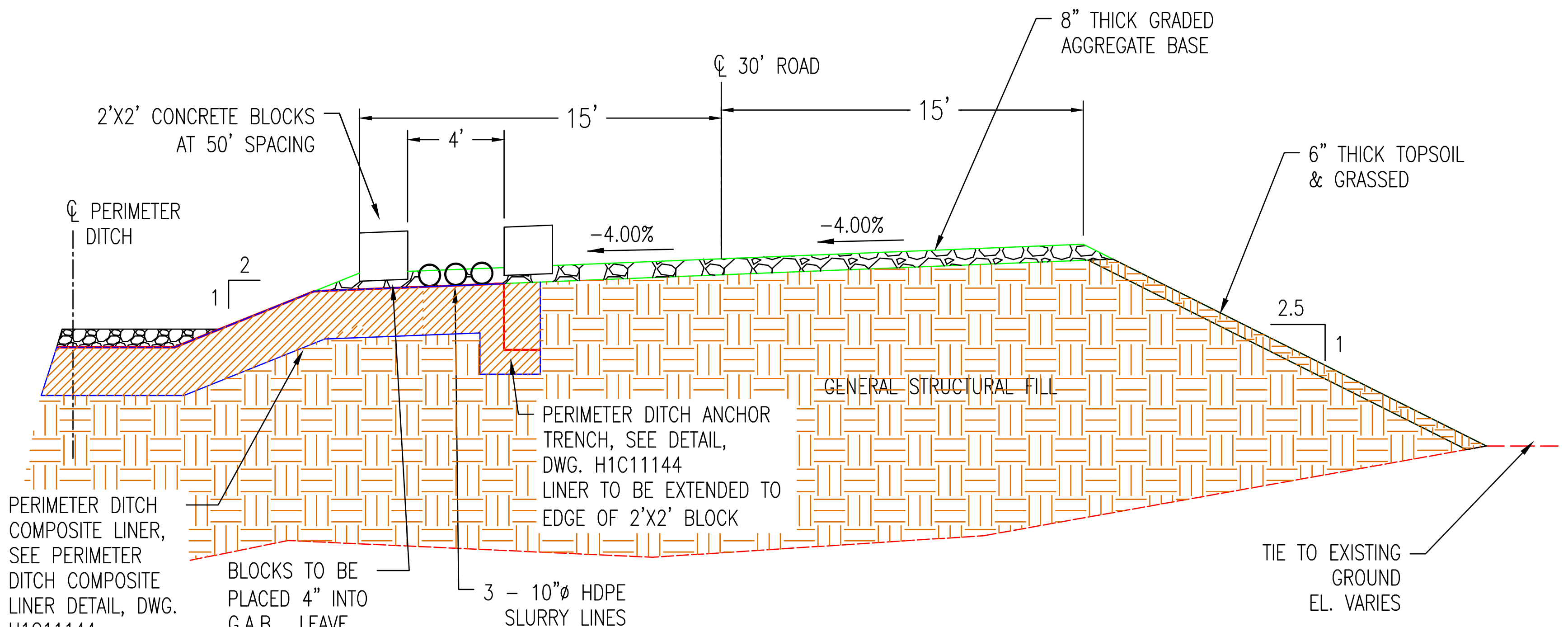
8" THICK GRADED AGGREGATE BASE
℄ 30' ROAD
2'X2' CONCRETE BLOCKS AT 50' SPACING
15'
15'
4'
6" THICK TOPSOIL & GRASSED
℄ PERIMETER DITCH
-4.00%
-4.00%
2
1
2.5
1
GENERAL STRUCTURAL FILL
PERIMETER DITCH ANCHOR TRENCH, SEE DETAIL, DWG. H1C11144 LINER TO BE EXTENDED TO EDGE OF 2'X2' BLOCK
PERIMETER DITCH COMPOSITE LINER, SEE PERIMETER DITCH COMPOSITE LINER DETAIL, DWG. H1C11144
BLOCKS TO BE PLACED 4" INTO G.A.B. LEAVE 4" OF CUSHION OVER LINERS
3 – 10"ø HDPE SLURRY LINES
TIE TO EXISTING GROUND EL. VARIES

PERIMETER ROAD W/ WIDENING FOR SLURRY LINES TYPICAL SECTION

NOT TO SCALE

(H1C11125, H1C11126, H1C11131, H1C11132 & H1C11133)

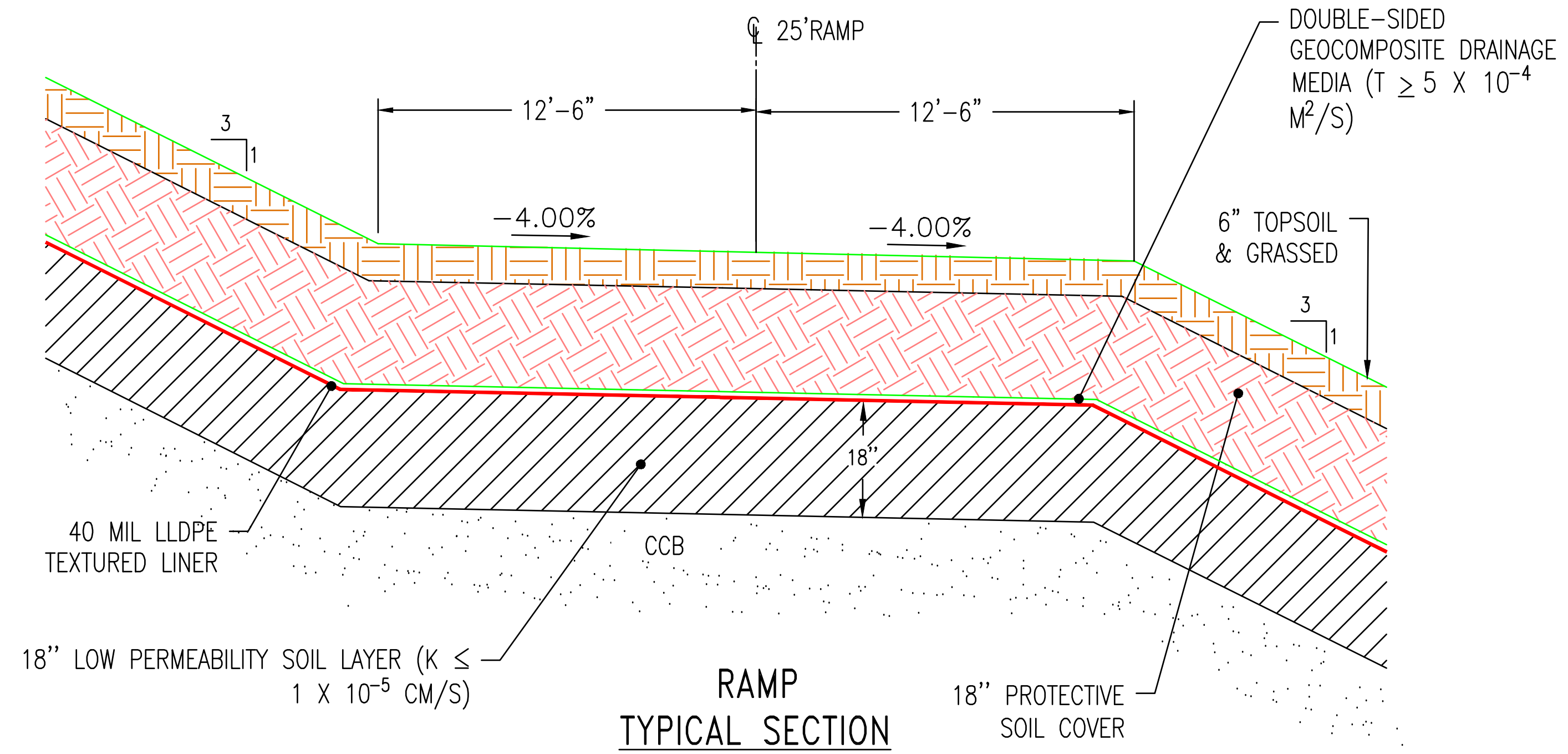
℄ 25'RAMP
DOUBLE-SIDED GEOCOMPOSITE DRAINAGE MEDIA (T ≥ 5 X 10⁻⁴ M²/S)
3
1
12'-6"
12'-6"
-4.00%
-4.00%
6" TOPSOIL & GRASSED
3
1
18"
40 MIL LLDPE TEXTURED LINER
CCB
18" LOW PERMEABILITY SOIL LAYER (K ≤ 1 X 10⁻⁵ CM/S)
18" PROTECTIVE SOIL COVER

RAMP TYPICAL SECTION

NOT TO SCALE

(H1C11130, H1C11132, & H1C11134)

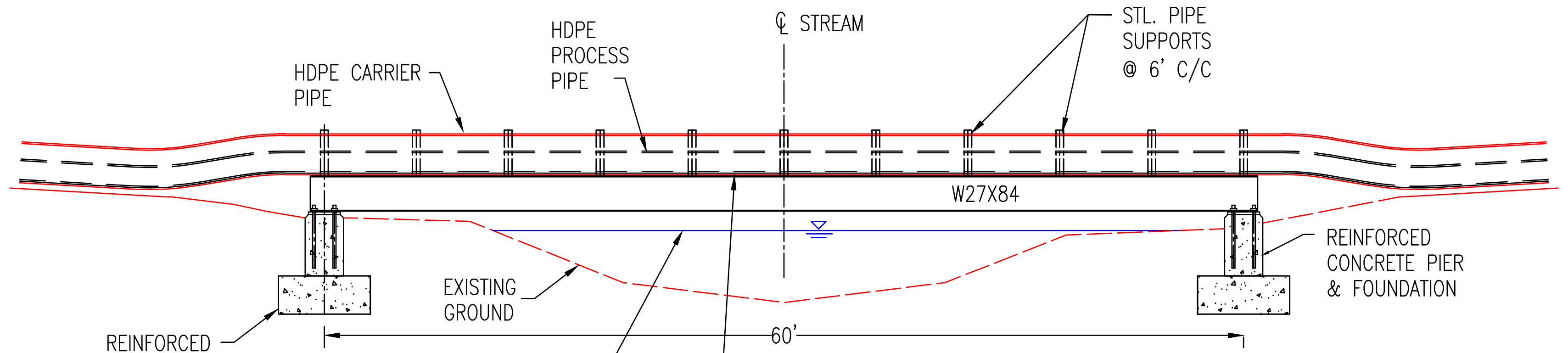
HDPE CARRIER PIPE
HDPE PROCESS PIPE
℄ STREAM
STL. PIPE SUPPORTS @ 6' C/C
W27X84
REINFORCED CONCRETE PIER & FOUNDATION
EXISTING GROUND
REINFORCED CONCRETE PIER & FOUNDATION
60'

CROSSING #1
100 YR. STORM
STREAM EL 700.8
CROSSING #2
100 YR. STORM
STREAM EL. 700.4
CROSSING #3
100 YR. STORM
STREAM EL 687.4

CROSSING #1
SLURRY LINES, 3-8" HDPE PIPES
W/18" HDPE CARRIER PIPES,
TOP STL/BOT. PIPES @ EL 709.46
CROSSING #2
SLURRY LINES, 3-8" HDPE PIPES
W/18" HDPE CARRIER PIPES,
TOP STL/BOT. PIPES @ EL 704.46

CROSSING #3
RETURN WATER LINES,
2-16" HDPE PIPES W/30" HDPE CARRIER
PIPES, TOP STL/BOT.
PIPES @ EL 690.96

SECTION

NOT TO SCALE

PROCESS PIPING STREAM CROSSING DETAILS

NOT TO SCALE

(H1C11124, H1C11125, & H1C11126)

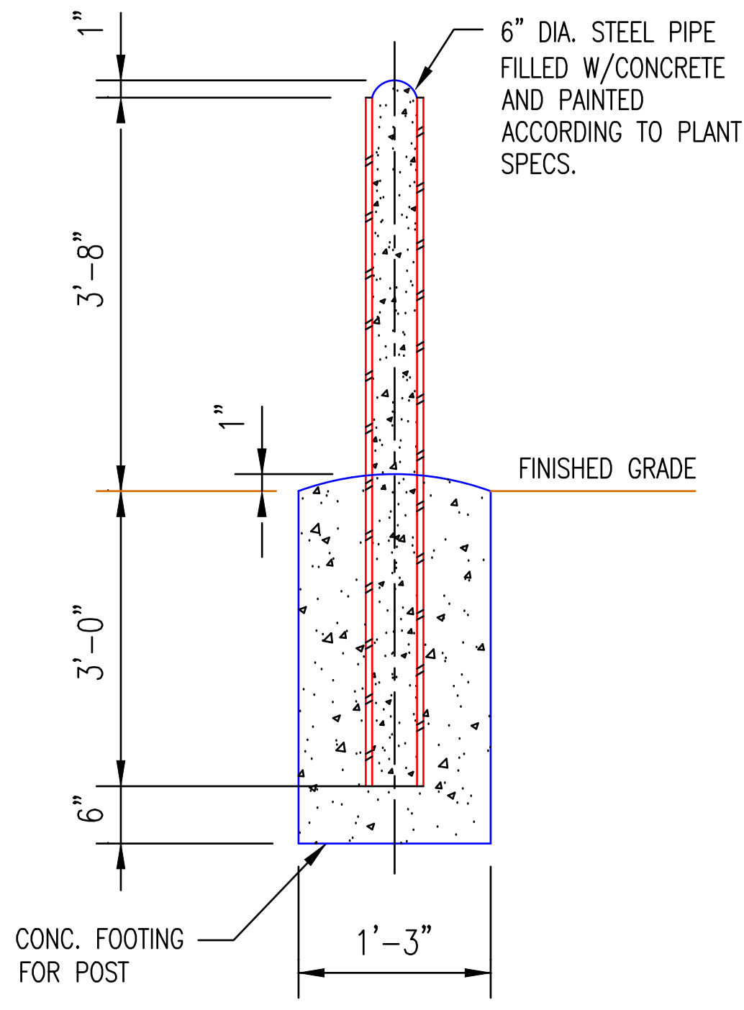
1"
6" DIA. STEEL PIPE FILLED W/CONCRETE AND PAINTED ACCORDING TO PLANT SPECS.
3'-8"
1"
FINISHED GRADE
3'-0"
6"
CONC. FOOTING FOR POST
1'-3"

BOLLARD DETAIL

NOT TO SCALE

REFERENCES:

H1C11120	TITLE SHEET AND DRAWING INDEX
H1C11124	GENERAL SITE DEVELOPMENT, CELL LAYOUT
H1C11125	CELL NO. 1, SITE DEVELOPMENT, BASE GRADING PLAN
H1C11126	CELL NO. 2, SITE DEVELOPMENT, ROUGH GRADE/BORROW PLAN
H1C11127	SECURITY ROAD LAYOUT AND GRADING PLAN
H1C11130	CELL NO. 1 FINAL STACKING PLAN
H1C11131	CELL NO. 2 SITE DEVELOPMENT, BASE GRADING PLAN
H1C11132	CELL 1 & 2 COMBINED, FINAL STACKING PLAN
H1C11133	CELL NO. 3 SITE DEVELOPMENT, BASE GRADING PLAN
H1C11134	CELL NO. 3 FINAL STACKING PLAN
H1C11135	CELL NO. 1 SECTIONS THRU STACK
H1C11141	CELL NO. 1 AND CELL NO. 2, SEDIMENT POND SPILLWAY SECTIONS AND DETAILS
H1C11144	CELL NO. 1 THROUGH CELL NO. 3, MISCELLANEOUS DETAILS, SHEET 2

GEORGIA
DEPARTMENT OF NATURAL RESOURCES
ENVIRONMENTAL PROTECTION DIVISION
Approved
Solid Waste Management Program
Approved By: Keith Stevens Digitally signed by Keith Stevens Date: 2022.10.25 08:59:48 -04'00'

NO. 27185
R. BRANT LANE
9/27/22

9/29/22

Southern Company Services, Inc.

Southern Company Generation
Engineering and Construction Services
FOR
Georgia Power Company

PLANT WANSLEY
COAL COMBUSTION RESIDUALS (CCR) LANDFILL
CELL NO. 1 THROUGH CELL NO. 3
MISCELLANEOUS SECTIONS AND DETAILS
SHEET 1

REVISION 0	DATE 09-23-2022
CCR LF PERMIT APPLICATION [BY HHNT, INC.]	

BY	CHK'D	CIVIL APPR	ELECT APPR	I/C APPR	MECH APPR	DISC MGR
ANR	RBL					

SCALE	DRAWING NUMBER	SHEET	CONT'D	REV
N.T.S.	**H1C11146**	1	FINAL	0

Acad2004 ANSI F: 40x28

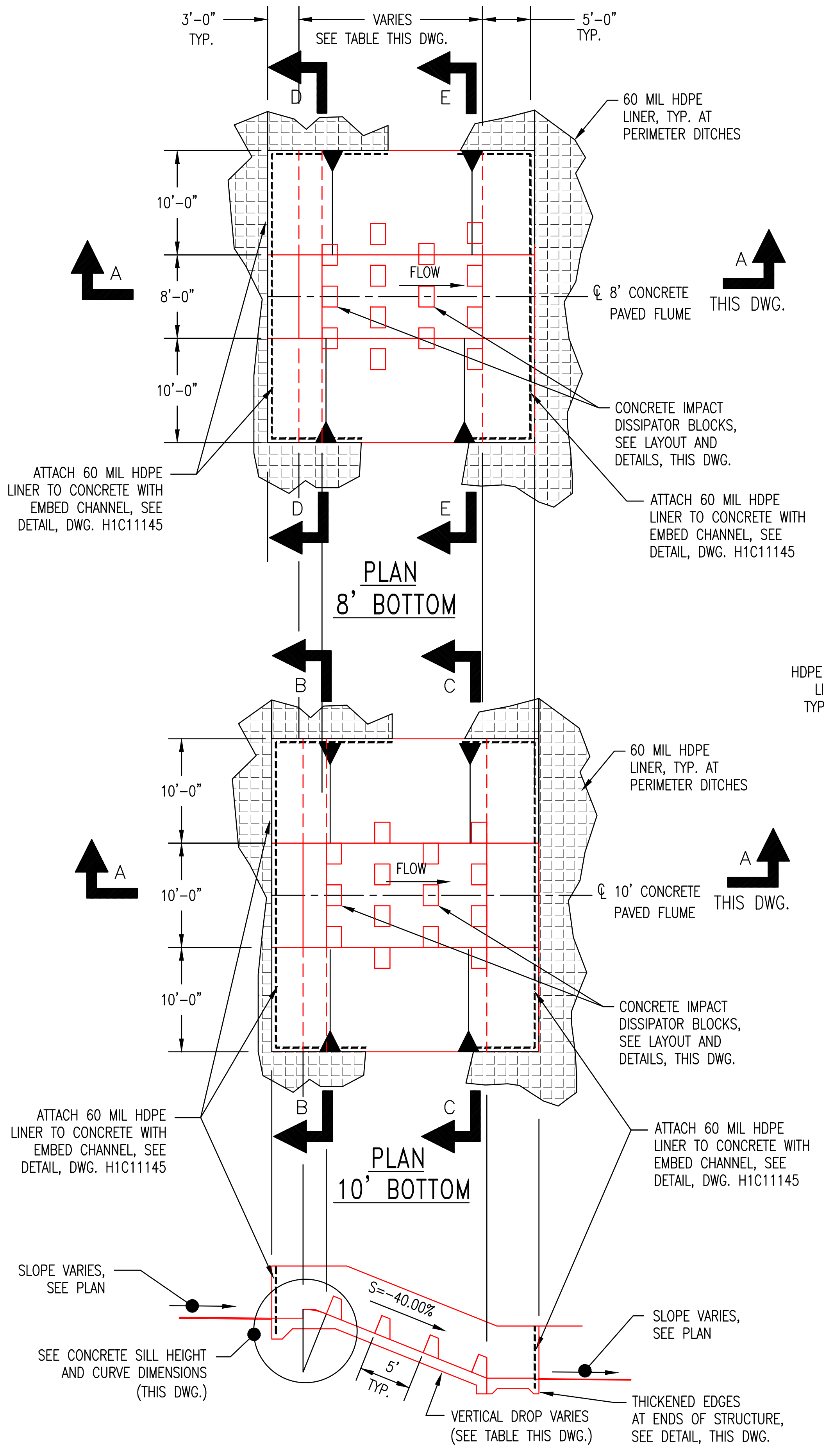
3'-0" TYP.
VARIES SEE TABLE THIS DWG.
5'-0" TYP.
D
E
B
C
A
THIS DWG.
60 MIL HDPE LINER, TYP. AT PERIMETER DITCHES
10'-0"
8'-0"
FLOW
℄ 8' CONCRETE PAVED FLUME
℄ 10' CONCRETE PAVED FLUME
CONCRETE IMPACT DISSIPATOR BLOCKS, SEE LAYOUT AND DETAILS, THIS DWG.
ATTACH 60 MIL HDPE LINER TO CONCRETE WITH EMBED CHANNEL, SEE DETAIL, DWG. H1C11145
SLOPE VARIES, SEE PLAN
SEE CONCRETE SILL HEIGHT AND CURVE DIMENSIONS (THIS DWG.)
S=-40.00%
5' TYP.
VERTICAL DROP VARIES (SEE TABLE THIS DWG.)
THICKENED EDGES AT ENDS OF STRUCTURE, SEE DETAIL, THIS DWG.

PLAN
8' BOTTOM

PLAN
10' BOTTOM

SECTION A-A

CONCRETE DITCH DROP STRUCTURES
8' AND 10' BOTTOM
(SEE PLANS FOR LOCATIONS)

N.T.S.

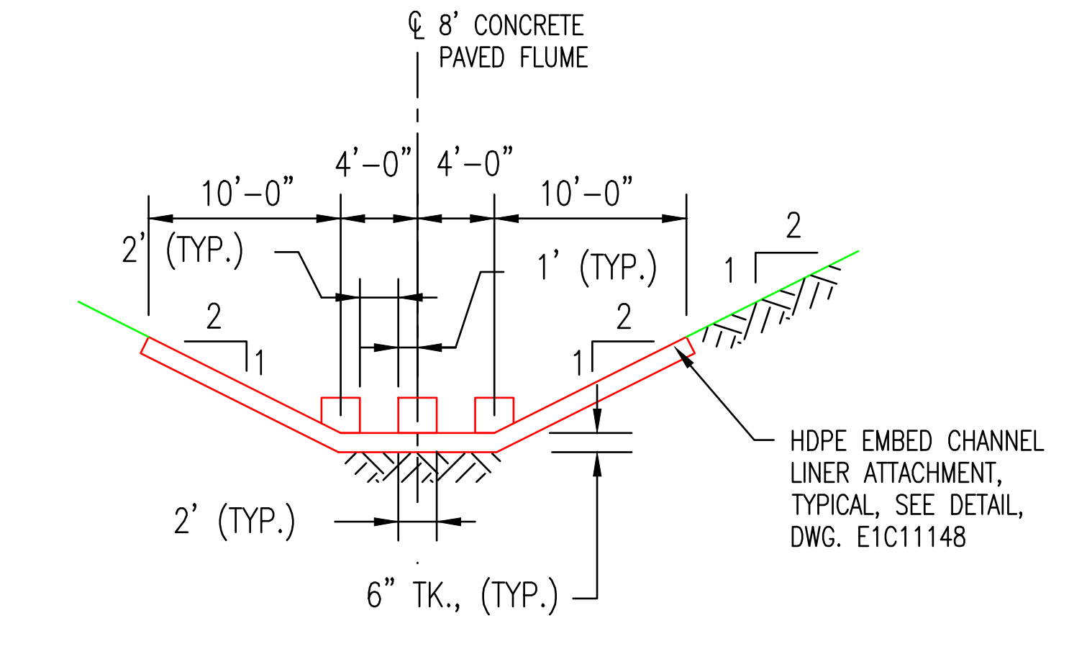
℄ 8' CONCRETE PAVED FLUME
10'-0"
4'-0"
2' (TYP.)
1' (TYP.)
2
1
6" TK., (TYP.)
HDPE EMBED CHANNEL LINER ATTACHMENT, TYPICAL, SEE DETAIL, DWG. E1C11148

SECTION D-D

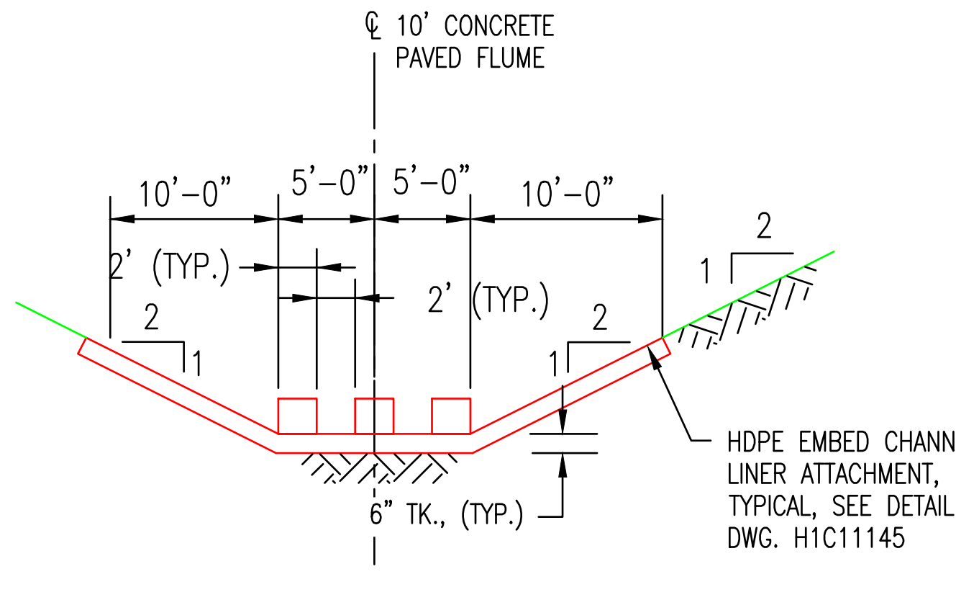
℄ 10' CONCRETE PAVED FLUME
10'-0"
5'-0"
2' (TYP.)
2
1
6" TK., (TYP.)
HDPE EMBED CHANNEL LINER ATTACHMENT, TYPICAL, SEE DETAIL, DWG. H1C11145

SECTION B-B

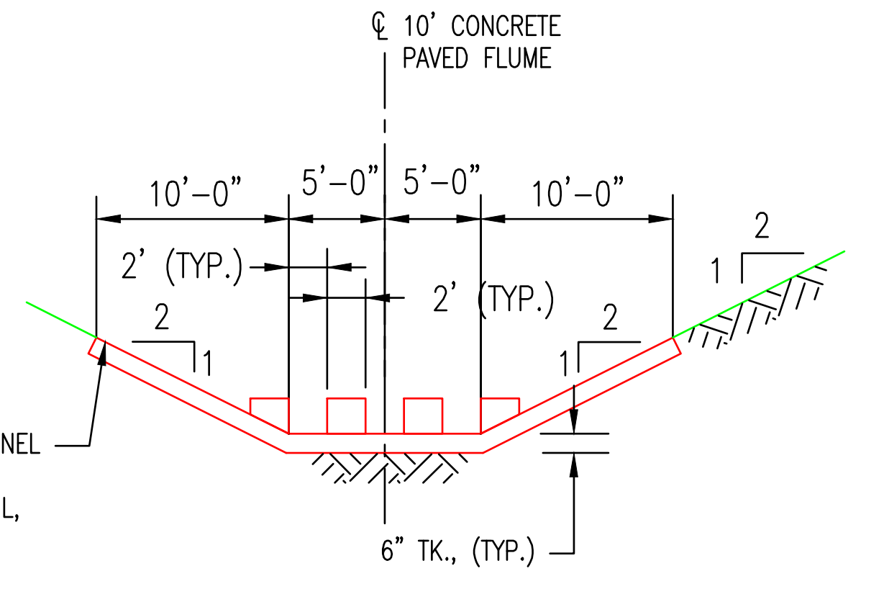
℄ 10' CONCRETE PAVED FLUME
10'-0"
5'-0"
2' (TYP.)
2
1
6" TK., (TYP.)

SECTION C-C

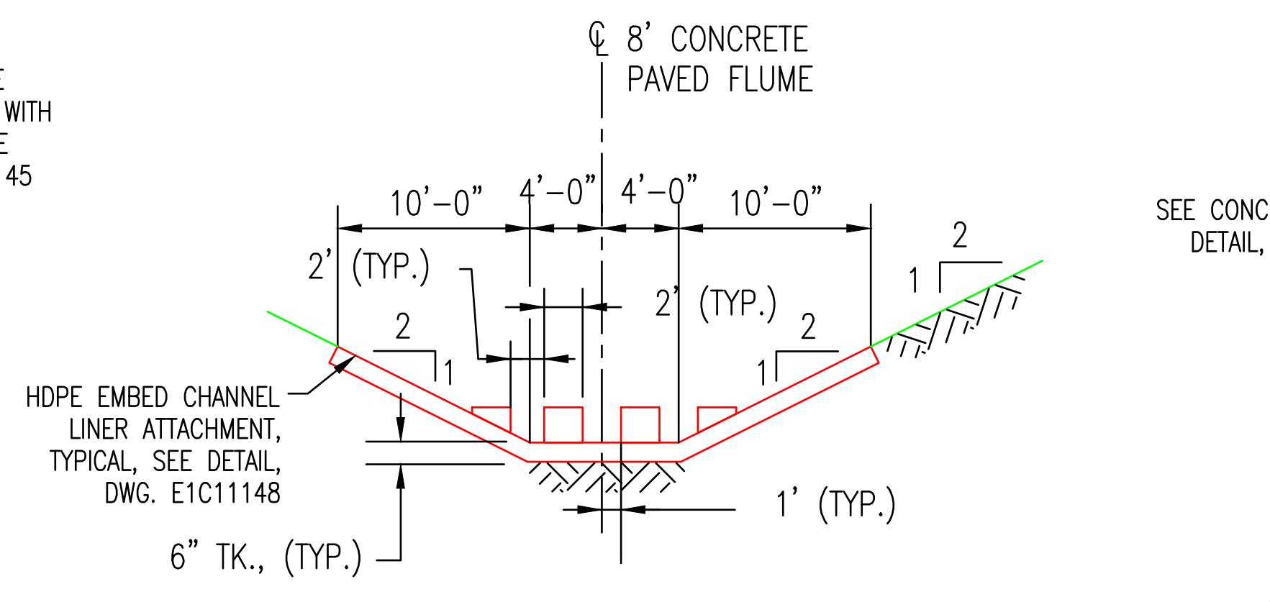
℄ 8' CONCRETE PAVED FLUME
10'-0"
4'-0"
2' (TYP.)
1' (TYP.)
2
1
HDPE EMBED CHANNEL LINER ATTACHMENT, TYPICAL, SEE DETAIL, DWG. E1C11148
6" TK., (TYP.)

SECTION E-E

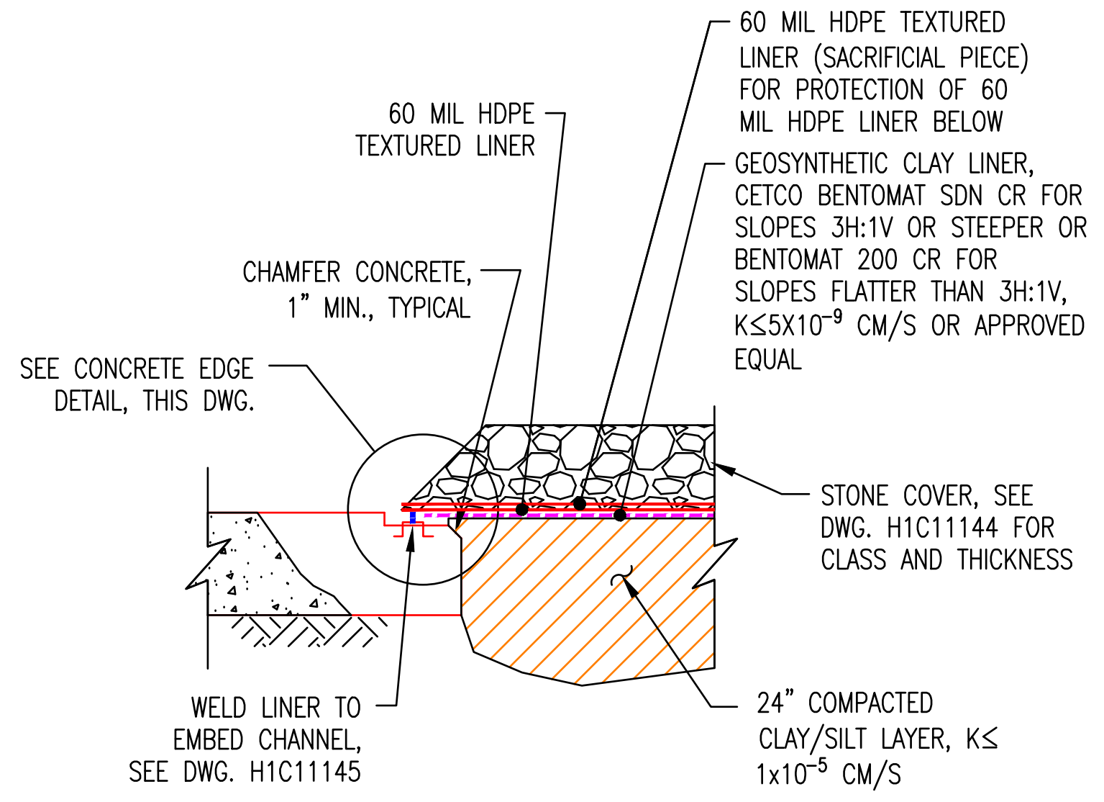
60 MIL HDPE TEXTURED LINER
60 MIL HDPE TEXTURED LINER (SACRIFICIAL PIECE) FOR PROTECTION OF 60 MIL HDPE LINER BELOW
GEOSYNTHETIC CLAY LINER, CETCO BENTOMAT SDN CR FOR SLOPES 3H:1V OR STEEPER OR BENTOMAT 200 CR FOR SLOPES FLATTER THAN 3H:1V, K≤5X10^{-9} CM/S OR APPROVED EQUAL
CHAMFER CONCRETE, 1" MIN., TYPICAL
SEE CONCRETE EDGE DETAIL, THIS DWG.
STONE COVER, SEE DWG. H1C11144 FOR CLASS AND THICKNESS
WELD LINER TO EMBED CHANNEL, SEE DWG. H1C11145
24" COMPACTED CLAY/SILT LAYER, K≤ 1x10^{-5} CM/S

LINER ATTACHMENT
AT CONCRETE EDGES

DROP STRUCTURE TABLE

STRUCTURE NO.	CELL NO.	DROP HEIGHT, FT.
1	1	6.00'
2	1	6.00'
3	1	10.00'
4	1	10.00'
5	2	5.62'
6	2	5.62'
7	2	8.13'
8	2	8.13'
9	2	8.13'
10	OMIT	
11	3	9.04'
12	3	10.00'
13	3	10.00'
14	3	10.00'
15	OMIT	
16	3	10.00'
17	3	10.00'
18	3	10.00'
19	3	9.20'

B = 1'-6 ⅔"
e = 4 ⅞"
hs = 10"
hb = 1'-10"
X = 1'-0 ⅞"
Y = 5 $\frac{5}{32}$"
Z = 1'-1 ⅞"
T = 10"
| 0 = 21°48'05"

DIMENSION TABLE

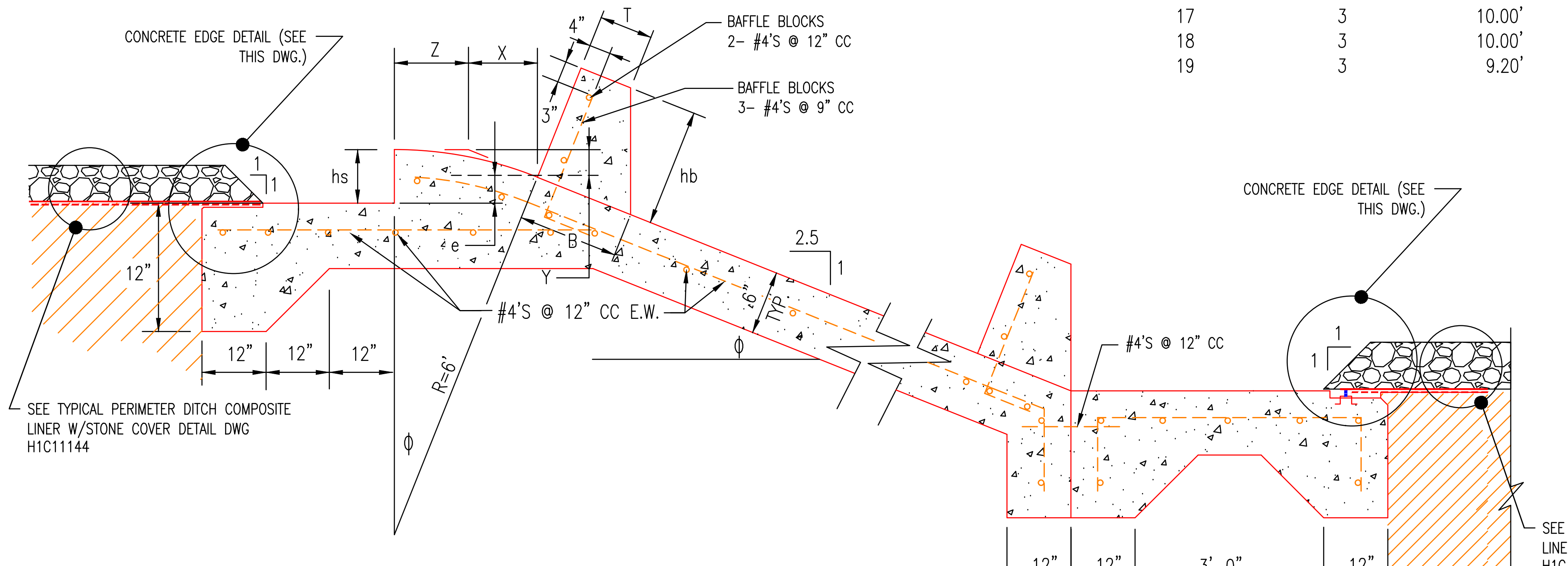
CONCRETE EDGE DETAIL (SEE THIS DWG.)
BAFFLE BLOCKS 2- #4'S @ 12" CC
BAFFLE BLOCKS 3- #4'S @ 9" CC
Z
X
4"
T
3"
hs
hb
e
B
Y
12"
#4'S @ 12" CC E.W.
R=6'
ϕ
2.5
1
6" TYP.
#4'S @ 12" CC
3'-0"
SEE TYPICAL PERIMETER DITCH COMPOSITE LINER W/STONE COVER DETAIL DWG H1C11144

CONCRETE SILL HEIGHT
AND CURVE DIMENSIONS

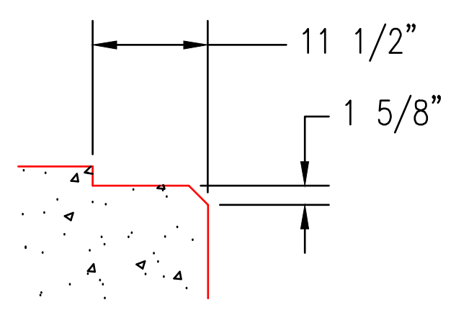

CONCRETE EDGE
DETAIL

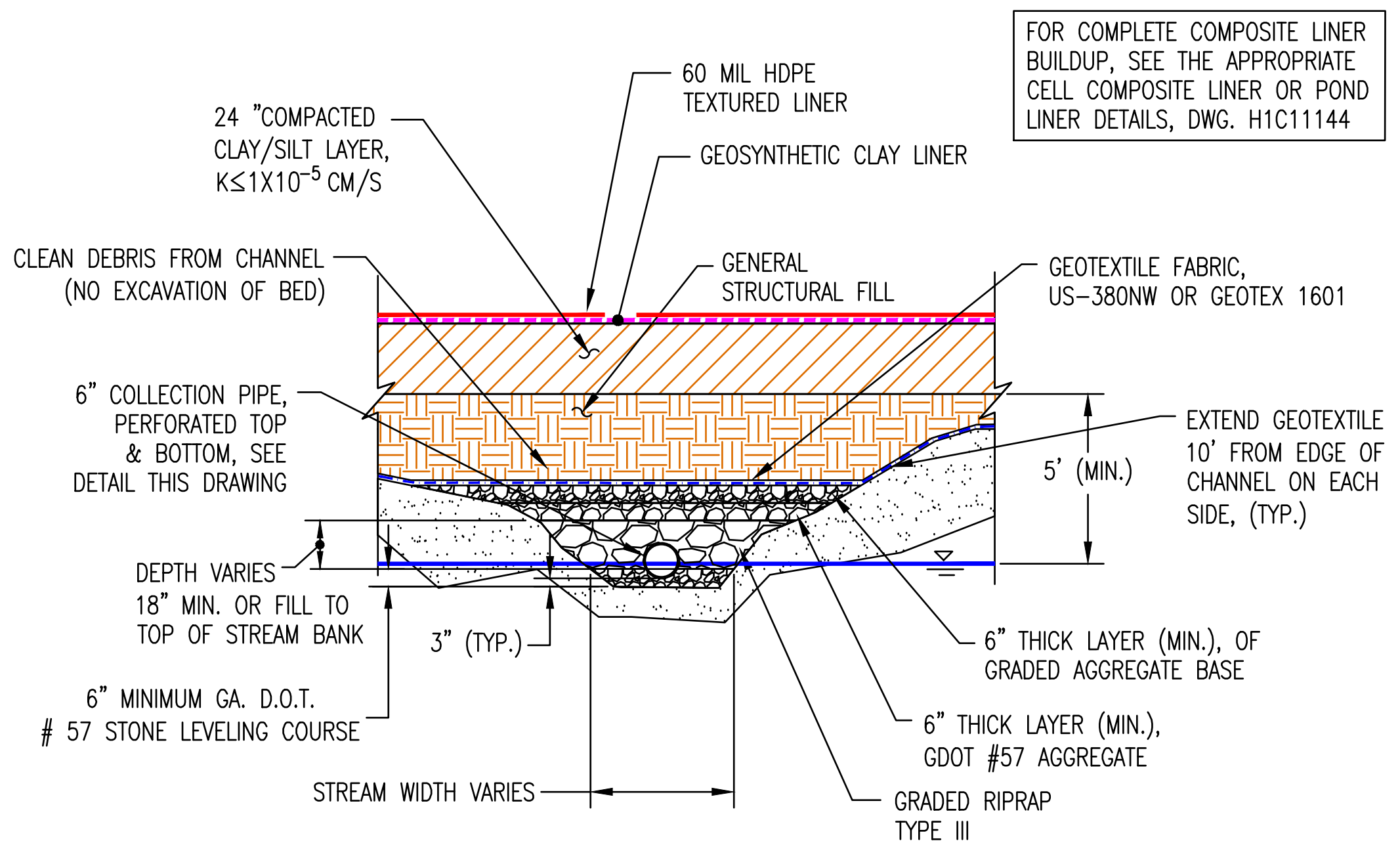
FOR COMPLETE COMPOSITE LINER BUILDUP, SEE THE APPROPRIATE CELL COMPOSITE LINER OR POND LINER DETAILS, DWG. H1C11144
60 MIL HDPE TEXTURED LINER
24 "COMPACTED CLAY/SILT LAYER, K≤1X10^{-5} CM/S
GEOSYNTHETIC CLAY LINER
CLEAN DEBRIS FROM CHANNEL (NO EXCAVATION OF BED)
GENERAL STRUCTURAL FILL
GEOTEXTILE FABRIC, US-380NW OR GEOTEX 1601
6" COLLECTION PIPE, PERFORATED TOP & BOTTOM, SEE DETAIL THIS DRAWING
EXTEND GEOTEXTILE 10' FROM EDGE OF CHANNEL ON EACH SIDE, (TYP.)
5' (MIN.)
DEPTH VARIES 18" MIN. OR FILL TO TOP OF STREAM BANK
3" (TYP.)
6" MINIMUM GA. D.O.T. # 57 STONE LEVELING COURSE
6" THICK LAYER (MIN.), OF GRADED AGGREGATE BASE
6" THICK LAYER (MIN.), GDOT #57 AGGREGATE
GRADED RIPRAP TYPE III
STREAM WIDTH VARIES

UNDERDRAIN (UNDER CELLS)
INSTALLED IN EXISTING STREAMBEDS

N.T.S.

GROUND WATER
MONITORING WELL

XX-X

SURFACE WATER
MONITORING POINT

XX-X

GROUND WATER & SURFACE WATER MONITORING POINT SIGNAGE
YELLOW BACKGROUND WITH BLACK LETTERING 18" X 24"
(H1C11165)

BUFFER ZONE

THE BUFFER ZONE SHALL NOT BE DISTURBED EXCEPT FOR DIRECT SITE INGRESS/EGRESS AND FOR GROUNDWATER MONITORING WELL INSTALLATION

PLANT WANSLEY
COAL COMBUSTION RESIDUALS
DISPOSAL FACILITY

THIS DISPOSAL FACILITY WILL ACCEPT ONLY COAL COMBUSTION RESIDUALS. ANY OTHER WASTES ARE PROHIBITED.

BUFFER ZONE SIGNAGE
YELLOW BACKGROUND
WITH BLACK LETTERING
18" X 24"
(H1C11124)

ENTRANCE SIGNAGE
WHITE BACKGROUND
WITH BLACK LETTERING
4' X 6'
(H1C11124)

SIGNAGE

N.T.S.
H1C11124

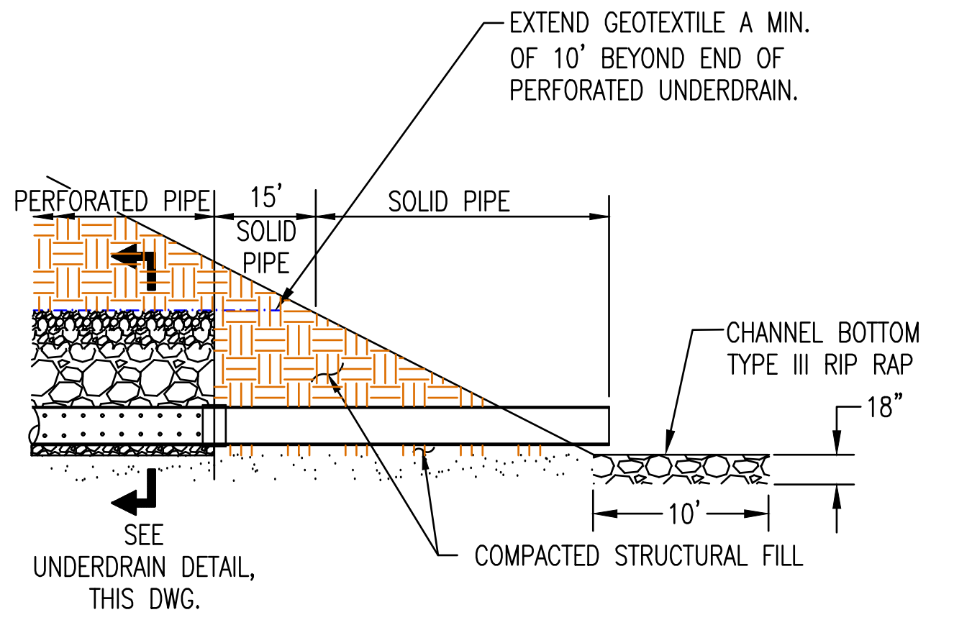
EXTEND GEOTEXTILE A MIN. OF 10' BEYOND END OF PERFORATED UNDERDRAIN.
PERFORATED PIPE
15' SOLID PIPE
SOLID PIPE
CHANNEL BOTTOM TYPE III RIP RAP
18"
10'
SEE UNDERDRAIN DETAIL, THIS DWG.
COMPACTED STRUCTURAL FILL

UNDERDRAIN OUTLET DETAIL

N.T.S.

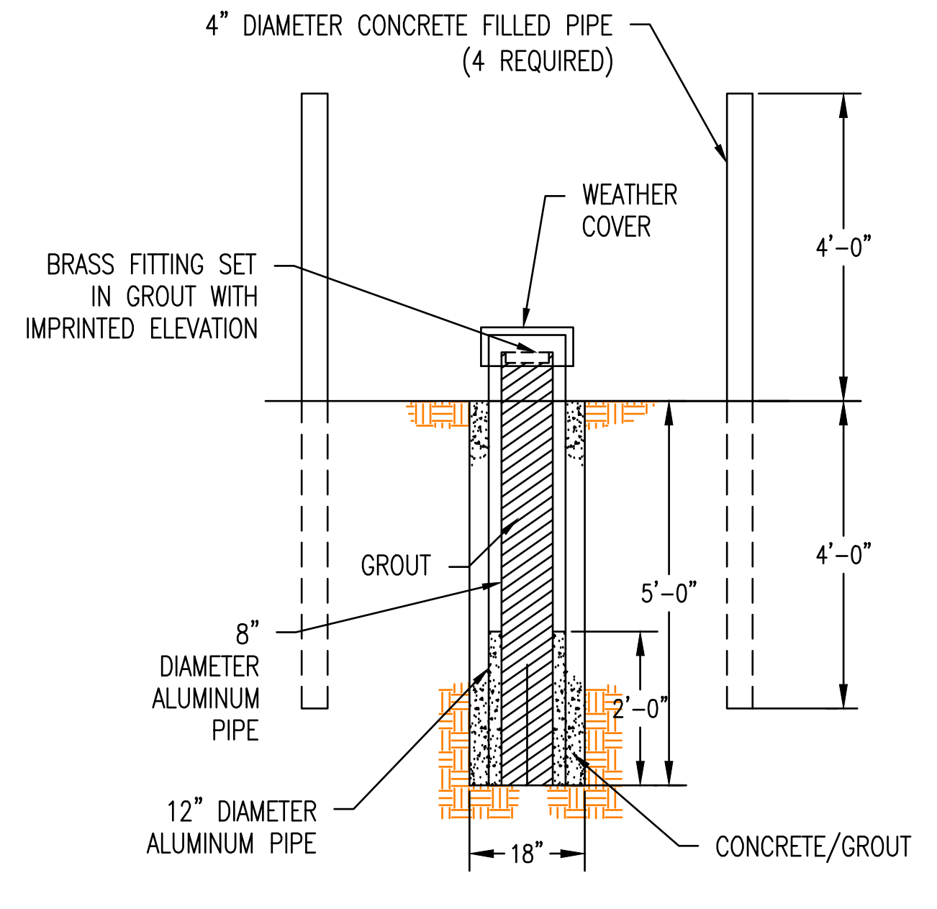
4" DIAMETER CONCRETE FILLED PIPE (4 REQUIRED)
WEATHER COVER
BRASS FITTING SET IN GROUT WITH IMPRINTED ELEVATION
4'-0"
GROUT
5'-0"
8" DIAMETER ALUMINUM PIPE
2'-0"
12" DIAMETER ALUMINUM PIPE
18"
CONCRETE/GROUT

SURVEY CONTROL MONUMENT

N.T.S.
H1C11124

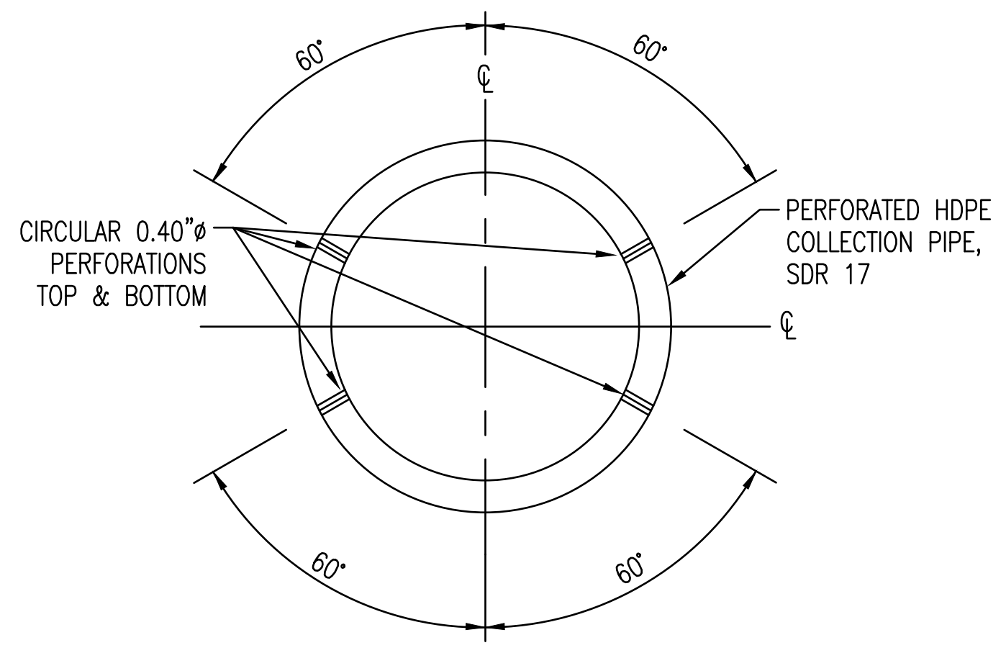
60°
℄
CIRCULAR 0.40"ø PERFORATIONS TOP & BOTTOM
PERFORATED HDPE COLLECTION PIPE, SDR 17

NOTE: 6" DIA. PERFORATED PIPE TO HAVE AASHTO CLASS I PERFORATIONS-6 ROWS OF PERFORATIONS REQ'D PER FT-OF-PIPE (24 PER LF OF PIPE OR 48 TOTAL FOR 2' LONG PERFORATED SECTION)

PERFORATED PIPE DETAIL
FOR UNDERDRAIN

N.T.S.

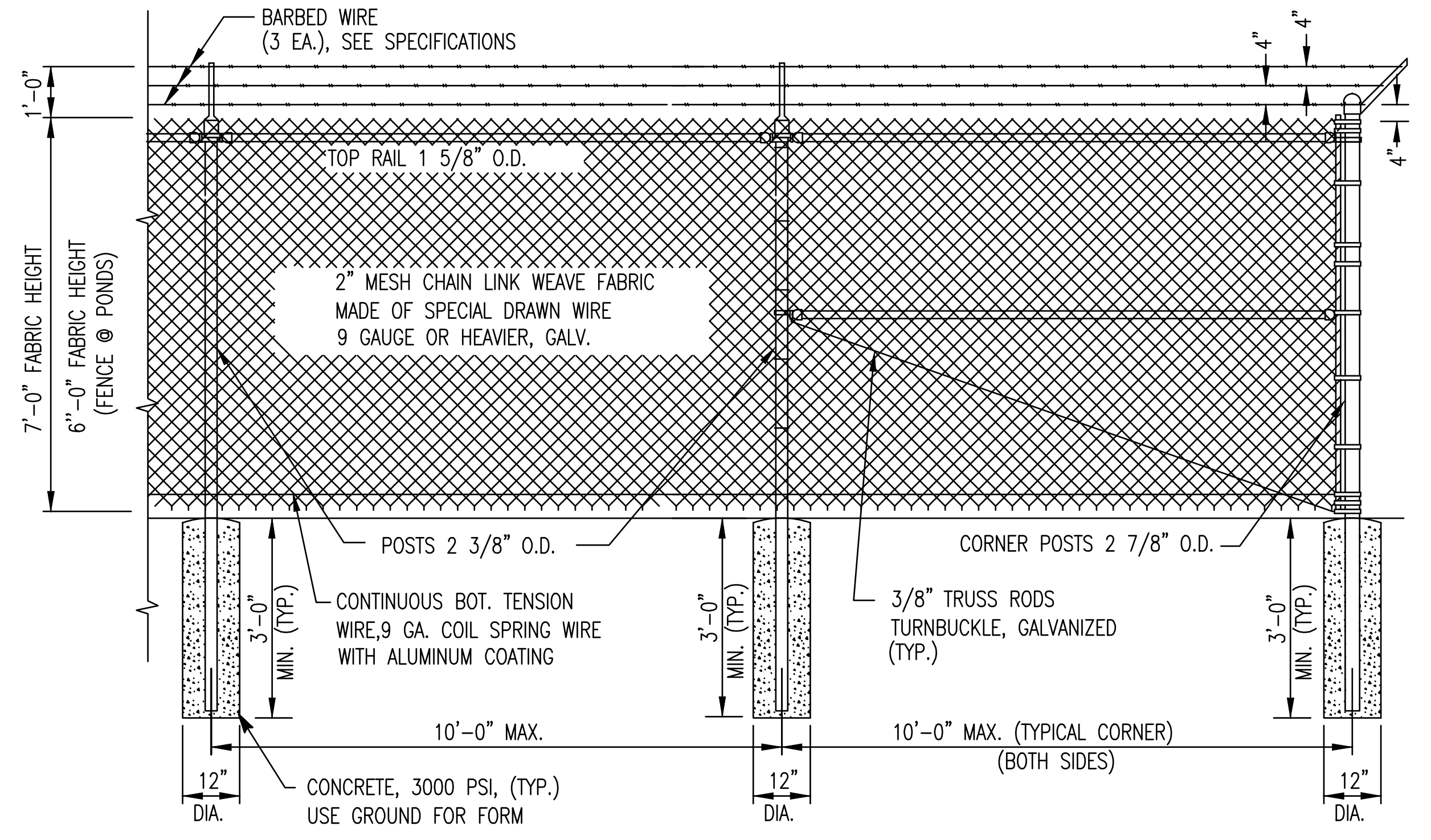
BARBED WIRE (3 EA.), SEE SPECIFICATIONS
1'-0"
4"
TOP RAIL 1 5/8" O.D.
7'-0" FABRIC HEIGHT
6"-0" FABRIC HEIGHT (FENCE @ PONDS)
2" MESH CHAIN LINK WEAVE FABRIC MADE OF SPECIAL DRAWN WIRE 9 GAUGE OR HEAVIER, GALV.
POSTS 2 3/8" O.D.
CORNER POSTS 2 7/8" O.D.
CONTINUOUS BOT. TENSION WIRE,9 GA. COIL SPRING WIRE WITH ALUMINUM COATING
3/8" TRUSS RODS TURNBUCKLE, GALVANIZED (TYP.)
3'-0" MIN. (TYP.)
10'-0" MAX.
10'-0" MAX. (TYPICAL CORNER) (BOTH SIDES)
12" DIA.
CONCRETE, 3000 PSI, (TYP.) USE GROUND FOR FORM

TYPICAL 8' SECURITY
FENCE SECTION AND CORNER

N.T.S.

NOTE:
IN STREAM BUFFER AREAS, FENCE CONSTRUCTION SHALL BE PERFORMED BY HAND TO PREVENT LAND DISTURBANCE. RIPRAP LAYER AND GEOTEXTILE SHOWN ABOVE SHALL NOT BE USED IN BUFFER STREAMS.

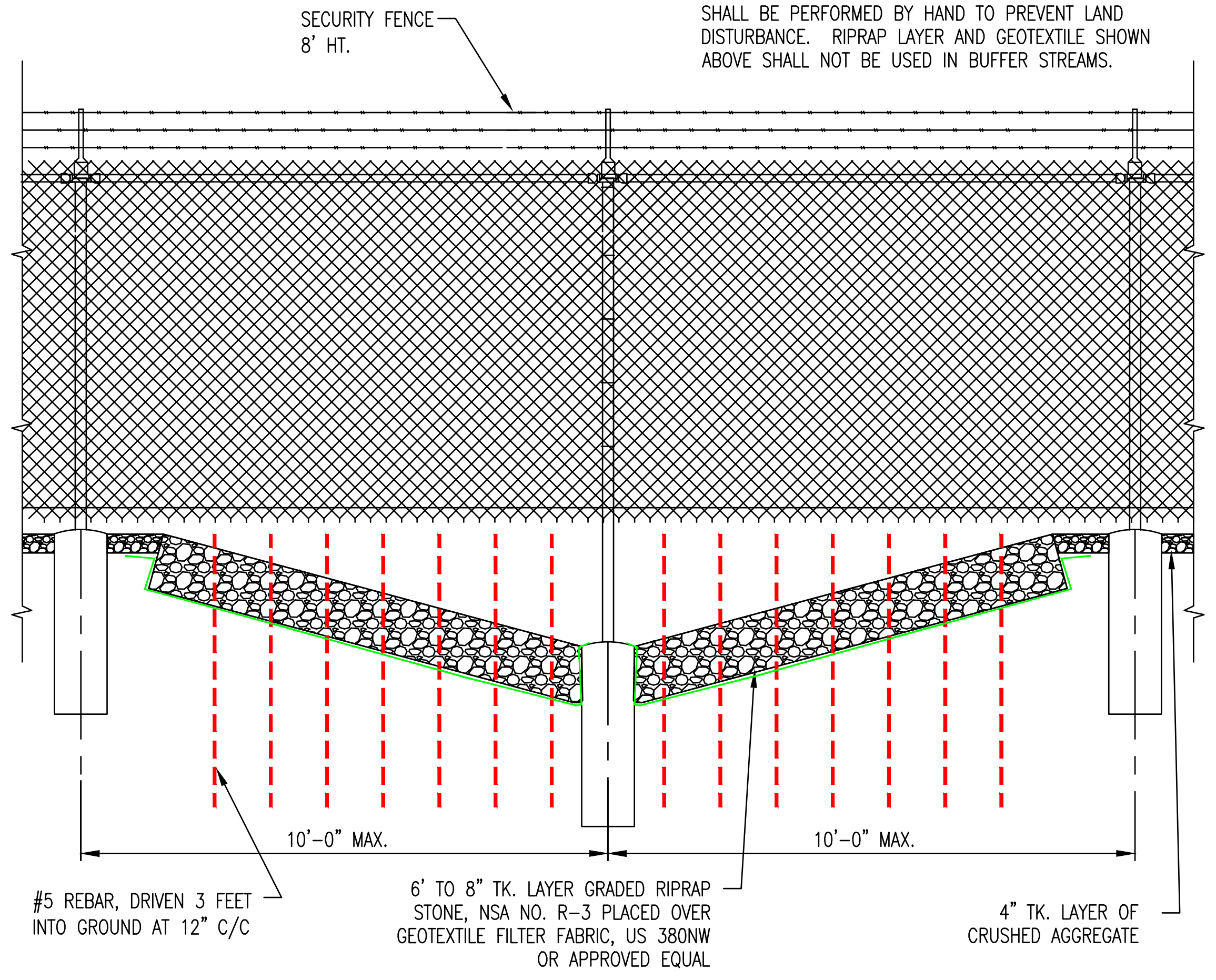
SECURITY FENCE 8' HT.
10'-0" MAX.
#5 REBAR, DRIVEN 3 FEET INTO GROUND AT 12" C/C
6' TO 8" TK. LAYER GRADED RIPRAP STONE, NSA NO. R-3 PLACED OVER GEOTEXTILE FILTER FABRIC, US 380NW OR APPROVED EQUAL
4" TK. LAYER OF CRUSHED AGGREGATE

TYPICAL SECURITY
FENCE DITCH/STREAM CROSSING

N.T.S.

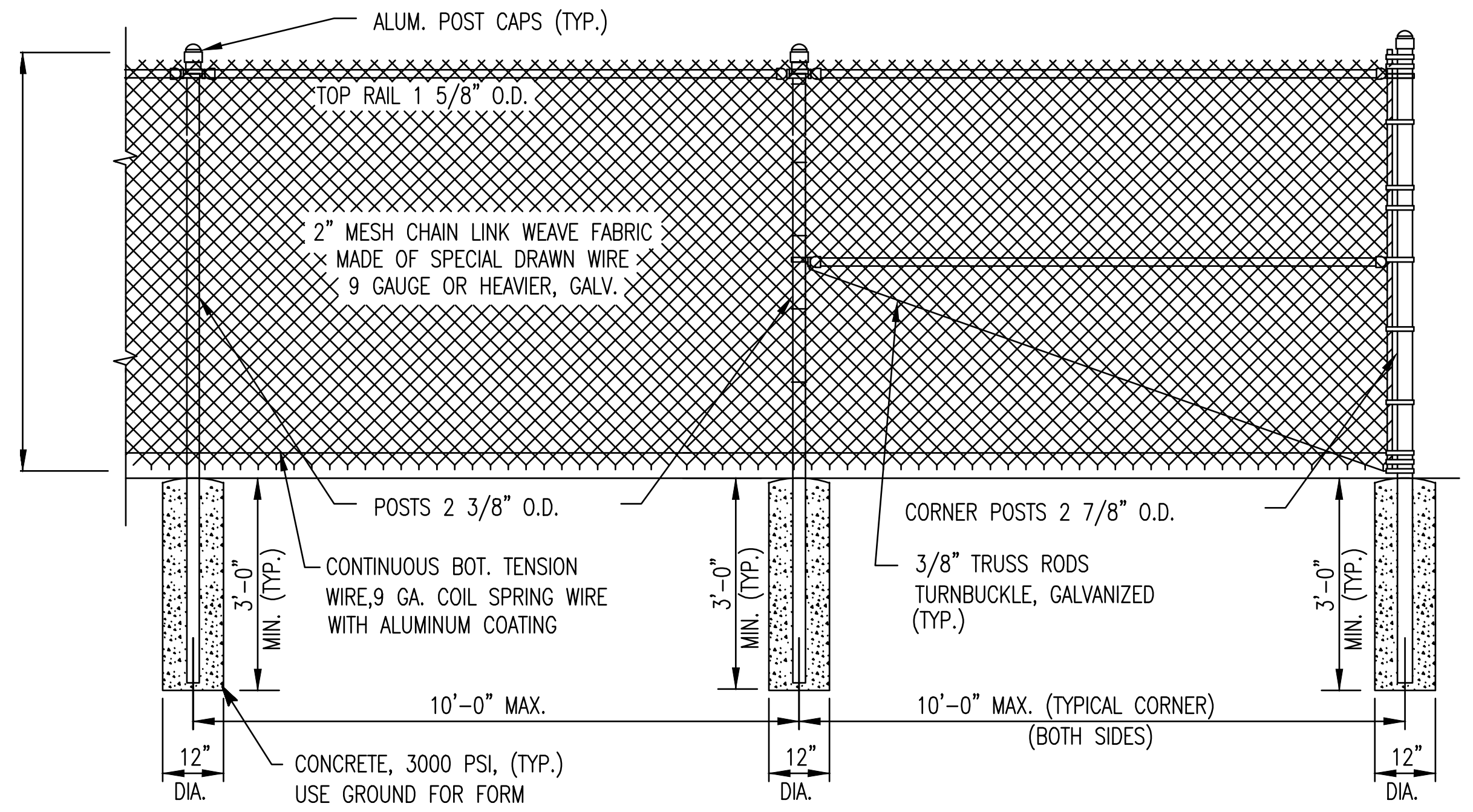
ALUM. POST CAPS (TYP.)
TOP RAIL 1 5/8" O.D.
2" MESH CHAIN LINK WEAVE FABRIC MADE OF SPECIAL DRAWN WIRE 9 GAUGE OR HEAVIER, GALV.
POSTS 2 3/8" O.D.
CORNER POSTS 2 7/8" O.D.
CONTINUOUS BOT. TENSION WIRE,9 GA. COIL SPRING WIRE WITH ALUMINUM COATING
3/8" TRUSS RODS TURNBUCKLE, GALVANIZED (TYP.)
3'-0" MIN. (TYP.)
10'-0" MAX.
10'-0" MAX. (TYPICAL CORNER) (BOTH SIDES)
12" DIA.
CONCRETE, 3000 PSI, (TYP.) USE GROUND FOR FORM

TYPICAL 6' FENCE SECTION AND CORNER
AT PERIMETER OF PONDS

N.T.S.

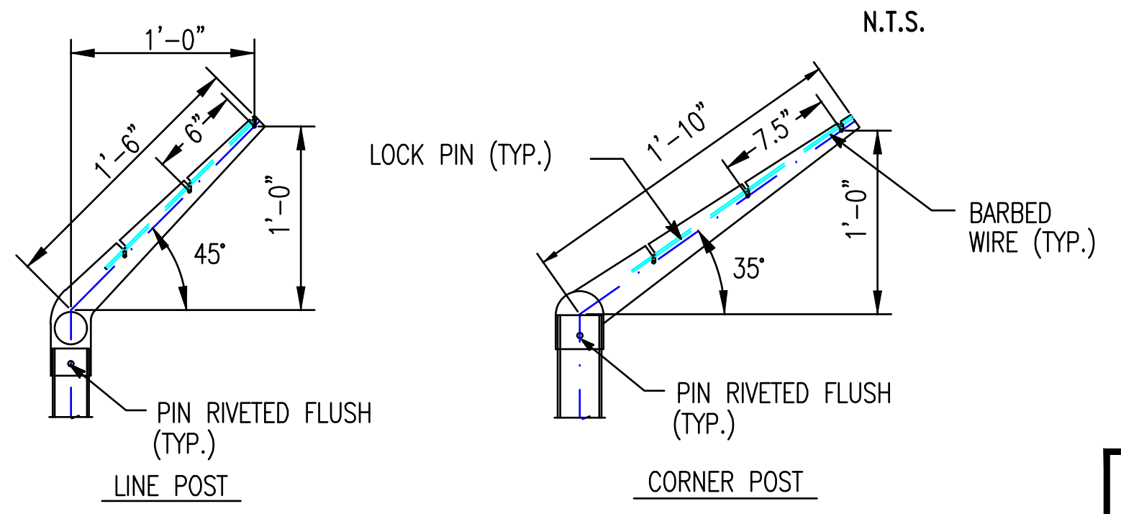
1'-0"
1'-6"
6"
45°
PIN RIVETED FLUSH (TYP.)
LINE POST
LOCK PIN (TYP.)
1'-10"
7.5"
35°
BARBED WIRE (TYP.)
CORNER POST

EXTENSION ARM DETAILS

REFERENCES:

H1C11120 TITLE SHEET AND DRAWING INDEX
H1C11124 GENERAL SITE DEVELOPMENT, CELL LAYOUT
H1C11125 CELL NO. 1, SITE DEVELOPMENT, BASE GRADING PLAN
H1C11127 SECURITY ROAD LAYOUT AND GRADING PLAN
H1C11131 CELL NO. 2 SITE DEVELOPMENT, BASE GRADING PLAN
H1C11133 CELL NO. 3 SITE DEVELOPMENT, BASE GRADING PLAN
H1C11136 CELL NO. 2 SECTIONS THRU STACK
H1C11145 CELL NO. 1 THROUGH CELL NO. 3, MISCELLANEOUS DETAILS, SHEET 3

NO. 27185
R. GRANT LANE
9/27/22

GEORGIA
DEPARTMENT OF NATURAL RESOURCES
ENVIRONMENTAL PROTECTION DIVISION
Approved
Solid Waste Management Program
Approved By: Keith Stevens
Digitally signed by Keith Stevens
Date: 2022.10.25 08:59:48 -04'00'

REVISION	DATE	REVISION	DATE	REVISION	DATE	REVISION	DATE

BY | CHK'D | CIVIL APPR | ELECT APPR | I/C APPR | MECH APPR | DISC MGR

Southern Company Services, Inc.

REVISION 0 DATE 09-23-2022
CCR LF PERMIT APPLICATION [BY HHNT, INC.]

BY	CHK'D	CIVIL APPR	ELECT APPR	I/C APPR	MECH APPR	DISC MGR
ANR	RBL		☒	☒	☒	☒

Southern Company Generation
Engineering and Construction Services
FOR

Georgia Power Company

PLANT WANSLEY
COAL COMBUSTION BY-PRODUCT DISPOSAL FACILITY
CELL NO. 1 THROUGH CELL NO. 3
MISCELLANEOUS SECTIONS AND DETAILS
SHEET 2

SCALE	DRAWING NUMBER	SHEET	CONT'D	REV
N.T.S.	**H1C11147**	1	FINAL	0

Acad2004 ANSI F: 40x28

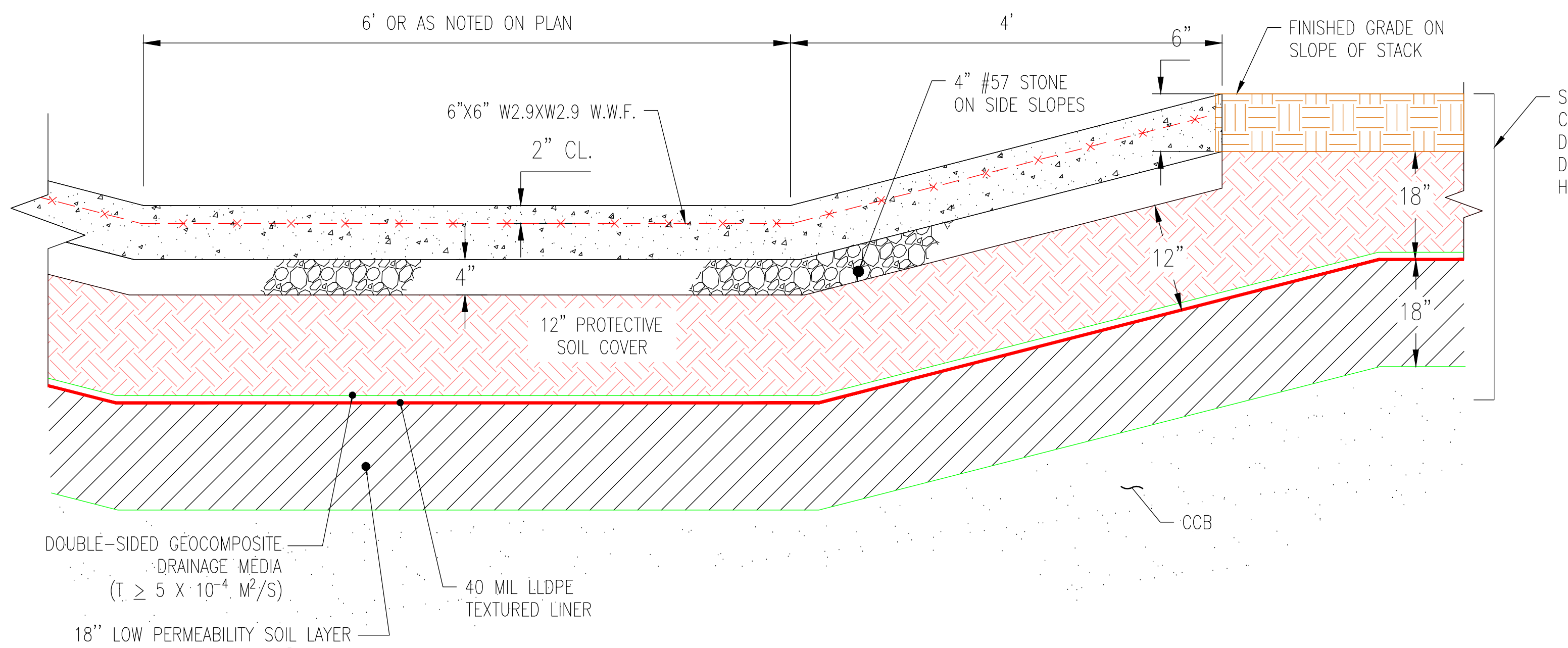
6' OR AS NOTED ON PLAN
4'
6"
FINISHED GRADE ON SLOPE OF STACK
4" #57 STONE ON SIDE SLOPES
6"X6" W2.9XW2.9 W.W.F.
2" CL.
4"
12"
18"
18"
12" PROTECTIVE SOIL COVER
SEE FINAL COVER DETAIL, DWG. H1C11146
CCB
DOUBLE-SIDED GEOCOMPOSITE DRAINAGE MEDIA (T ≥ 5 X 10^-4 M²/S)
40 MIL LLDPE TEXTURED LINER
18'' LOW PERMEABILITY SOIL LAYER (K ≤ 1 X 10^-5 CM/S)

CONCRETE FLUME SECTION S–S
3:1 SIDE SLOPE AREA
N.T.S.
(THIS DWG.)

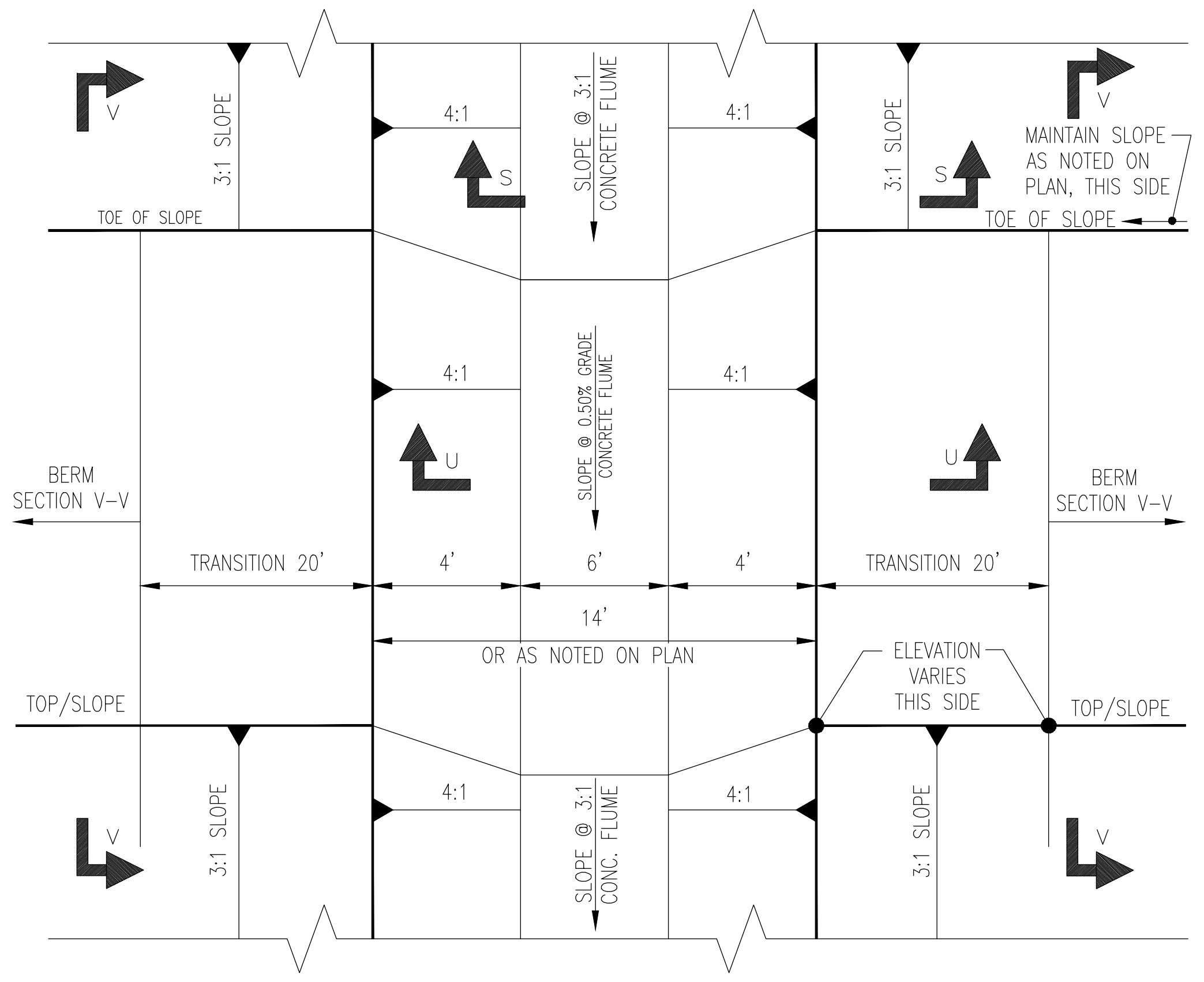
V
S
U
3:1 SLOPE
TOE OF SLOPE
4:1
SLOPE @ 3:1 CONCRETE FLUME
SLOPE @ 0.50% GRADE CONCRETE FLUME
SLOPE @ 3:1 CONC. FLUME
MAINTAIN SLOPE AS NOTED ON PLAN, THIS SIDE
BERM SECTION V–V
TRANSITION 20'
4'
6'
14'
OR AS NOTED ON PLAN
ELEVATION VARIES THIS SIDE
TOP/SLOPE

BERM TRANSITION AT FLUME DETAIL
PLAN VIEW
N.T.S.
(H1C11132 & H1C11134)

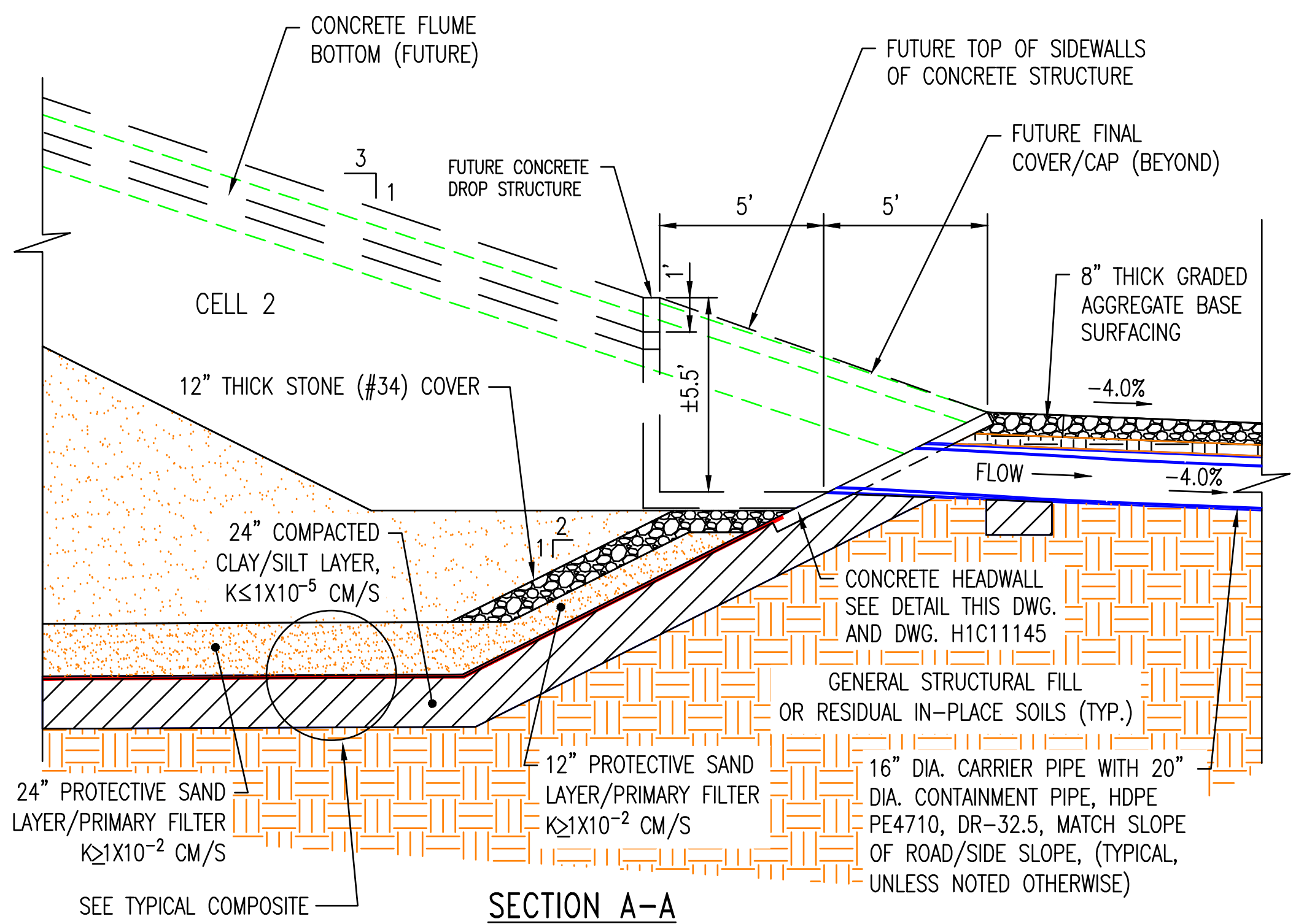
CONCRETE FLUME BOTTOM (FUTURE)
FUTURE TOP OF SIDEWALLS OF CONCRETE STRUCTURE
FUTURE FINAL COVER/CAP (BEYOND)
FUTURE CONCRETE DROP STRUCTURE
3
1
5'
5'
1'
±5.5'
CELL 2
8" THICK GRADED AGGREGATE BASE SURFACING
-4.0%
FLOW
-4.0%
12" THICK STONE (#34) COVER
2
1
24" COMPACTED CLAY/SILT LAYER, K≤1X10^-5 CM/S
CONCRETE HEADWALL SEE DETAIL THIS DWG. AND DWG. H1C11145
GENERAL STRUCTURAL FILL OR RESIDUAL IN-PLACE SOILS (TYP.)
24" PROTECTIVE SAND LAYER/PRIMARY FILTER K≥1X10^-2 CM/S
12" PROTECTIVE SAND LAYER/PRIMARY FILTER K≥1X10^-2 CM/S
16" DIA. CARRIER PIPE WITH 20" DIA. CONTAINMENT PIPE, HDPE PE4710, DR-32.5, MATCH SLOPE OF ROAD/SIDE SLOPE, (TYPICAL, UNLESS NOTED OTHERWISE)
SEE TYPICAL COMPOSITE LINER DETAIL DWG H1C11144

SECTION A–A
RIM DITCH
N.T.S.

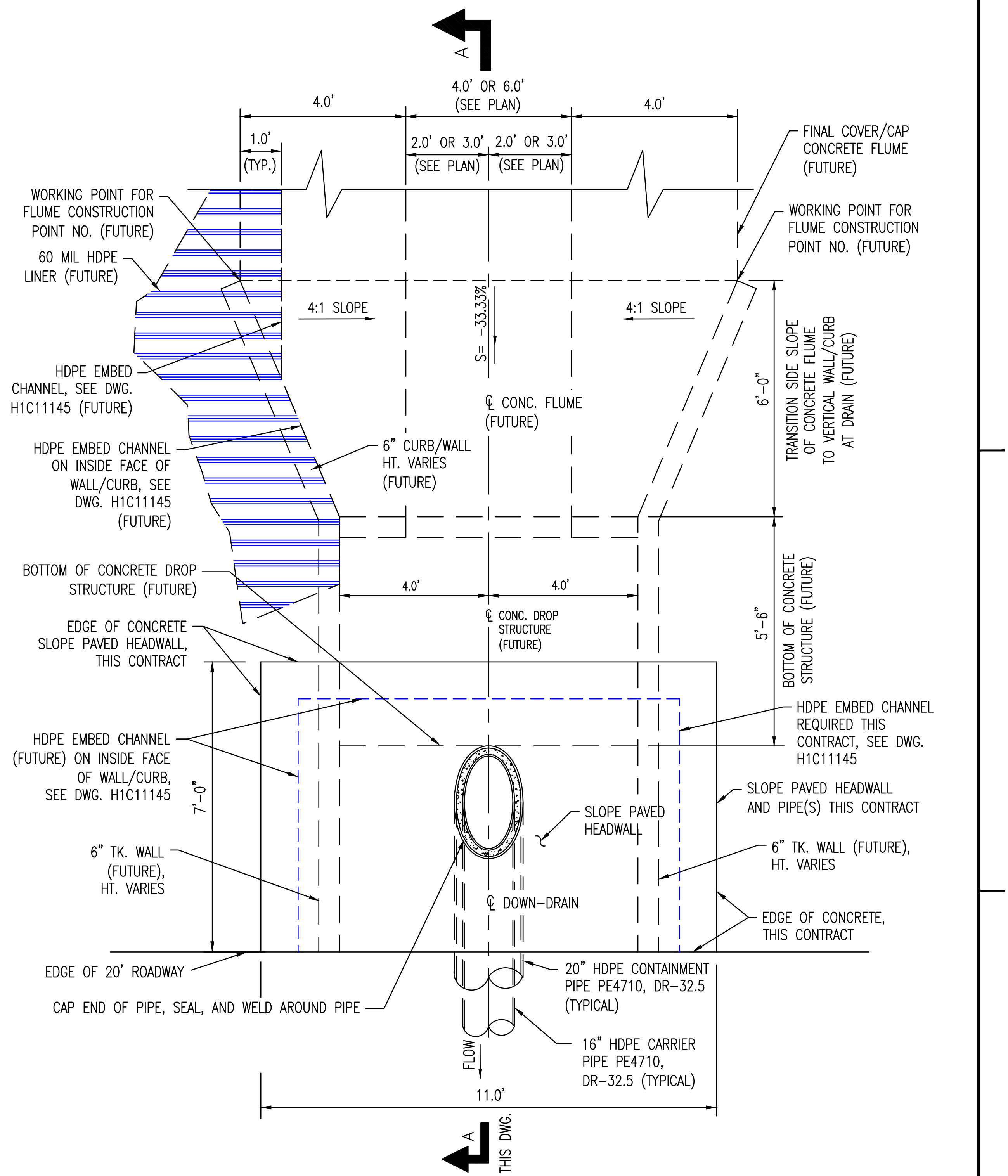
A
4.0'
4.0' OR 6.0' (SEE PLAN)
4.0'
1.0' (TYP.)
2.0' OR 3.0' (SEE PLAN)
2.0' OR 3.0' (SEE PLAN)
FINAL COVER/CAP CONCRETE FLUME (FUTURE)
WORKING POINT FOR FLUME CONSTRUCTION POINT NO. (FUTURE)
WORKING POINT FOR FLUME CONSTRUCTION POINT NO. (FUTURE)
60 MIL HDPE LINER (FUTURE)
4:1 SLOPE
S= -33.33%
4:1 SLOPE
HDPE EMBED CHANNEL, SEE DWG. H1C11145 (FUTURE)
℄ CONC. FLUME (FUTURE)
6'-0"
TRANSITION SIDE SLOPE OF CONCRETE FLUME TO VERTICAL WALL/CURB AT DRAIN (FUTURE)
HDPE EMBED CHANNEL ON INSIDE FACE OF WALL/CURB, SEE DWG. H1C11145 (FUTURE)
6" CURB/WALL HT. VARIES (FUTURE)
BOTTOM OF CONCRETE DROP STRUCTURE (FUTURE)
4.0'
4.0'
℄ CONC. DROP STRUCTURE (FUTURE)
5'-6"
BOTTOM OF CONCRETE STRUCTURE (FUTURE)
EDGE OF CONCRETE SLOPE PAVED HEADWALL, THIS CONTRACT
HDPE EMBED CHANNEL REQUIRED THIS CONTRACT, SEE DWG. H1C11145
HDPE EMBED CHANNEL (FUTURE) ON INSIDE FACE OF WALL/CURB, SEE DWG. H1C11145
7'-0"
SLOPE PAVED HEADWALL AND PIPE(S) THIS CONTRACT
SLOPE PAVED HEADWALL
6" TK. WALL (FUTURE), HT. VARIES
6" TK. WALL (FUTURE), HT. VARIES
℄ DOWN-DRAIN
EDGE OF CONCRETE, THIS CONTRACT
EDGE OF 20' ROADWAY
20" HDPE CONTAINMENT PIPE PE4710, DR-32.5 (TYPICAL)
CAP END OF PIPE, SEAL, AND WELD AROUND PIPE
16" HDPE CARRIER PIPE PE4710, DR-32.5 (TYPICAL)
FLOW
11.0'
A
THIS DWG.

PLAN
INLET WITH HEADWALL
N.T.S.

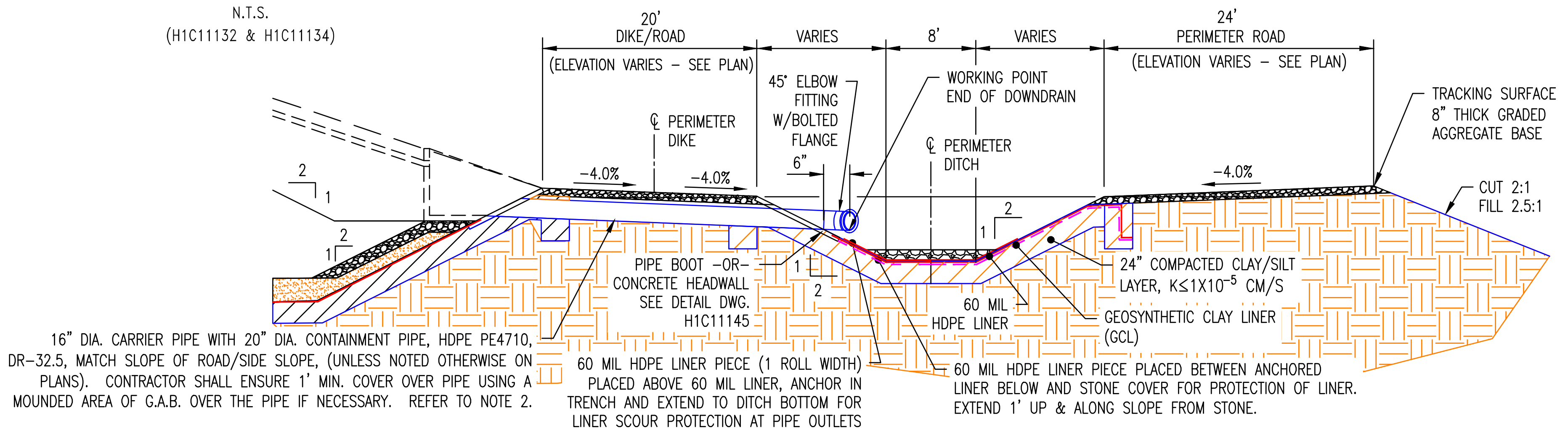
20' DIKE/ROAD (ELEVATION VARIES - SEE PLAN)
VARIES
8'
VARIES
24' PERIMETER ROAD (ELEVATION VARIES - SEE PLAN)
45° ELBOW FITTING W/BOLTED FLANGE
6"
WORKING POINT END OF DOWNDRAIN
℄ PERIMETER DIKE
℄ PERIMETER DITCH
TRACKING SURFACE 8" THICK GRADED AGGREGATE BASE
-4.0%
-4.0%
-4.0%
2
1
CUT 2:1
FILL 2.5:1
PIPE BOOT -OR- CONCRETE HEADWALL SEE DETAIL DWG. H1C11145
24" COMPACTED CLAY/SILT LAYER, K≤1X10^-5 CM/S
60 MIL HDPE LINER
GEOSYNTHETIC CLAY LINER (GCL)
16" DIA. CARRIER PIPE WITH 20" DIA. CONTAINMENT PIPE, HDPE PE4710, DR-32.5, MATCH SLOPE OF ROAD/SIDE SLOPE, (UNLESS NOTED OTHERWISE ON PLANS). CONTRACTOR SHALL ENSURE 1' MIN. COVER OVER PIPE USING A MOUNDED AREA OF G.A.B. OVER THE PIPE IF NECESSARY. REFER TO NOTE 2.
60 MIL HDPE LINER PIECE (1 ROLL WIDTH) PLACED ABOVE 60 MIL LINER, ANCHOR IN TRENCH AND EXTEND TO DITCH BOTTOM FOR LINER SCOUR PROTECTION AT PIPE OUTLETS
60 MIL HDPE LINER PIECE PLACED BETWEEN ANCHORED LINER BELOW AND STONE COVER FOR PROTECTION OF LINER. EXTEND 1' UP & ALONG SLOPE FROM STONE.

TYPICAL DOWN–DRAIN INTO PERIMETER DITCH
(WITH DIKE ELEVATION AT PERIMETER ROAD ELEVATION)
N.T.S.

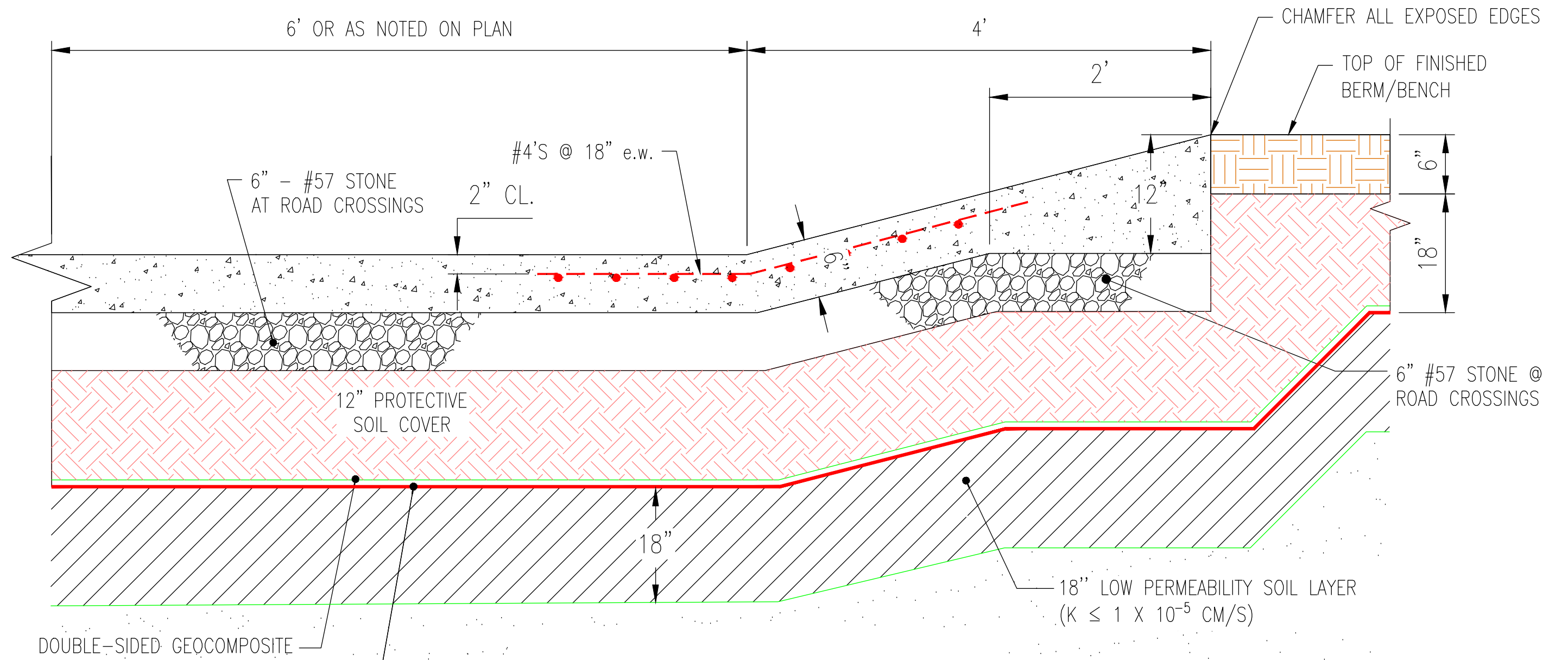
6' OR AS NOTED ON PLAN
4'
2'
CHAMFER ALL EXPOSED EDGES
TOP OF FINISHED BERM/BENCH
#4'S @ 18" e.w.
6" - #57 STONE AT ROAD CROSSINGS
2" CL.
6"
12"
6"
18"
12" PROTECTIVE SOIL COVER
6" #57 STONE @ ROAD CROSSINGS
18"
18'' LOW PERMEABILITY SOIL LAYER (K ≤ 1 X 10^-5 CM/S)
DOUBLE-SIDED GEOCOMPOSITE DRAINAGE MEDIA (T ≥ 5 X 10^-4 M²/S)
40 MIL LLDPE TEXTURED LINER
CCB

CONCRETE FLUME SECTION U–U
AT CENTERLINE OF BERM
N.T.S.
(THIS DWG.)

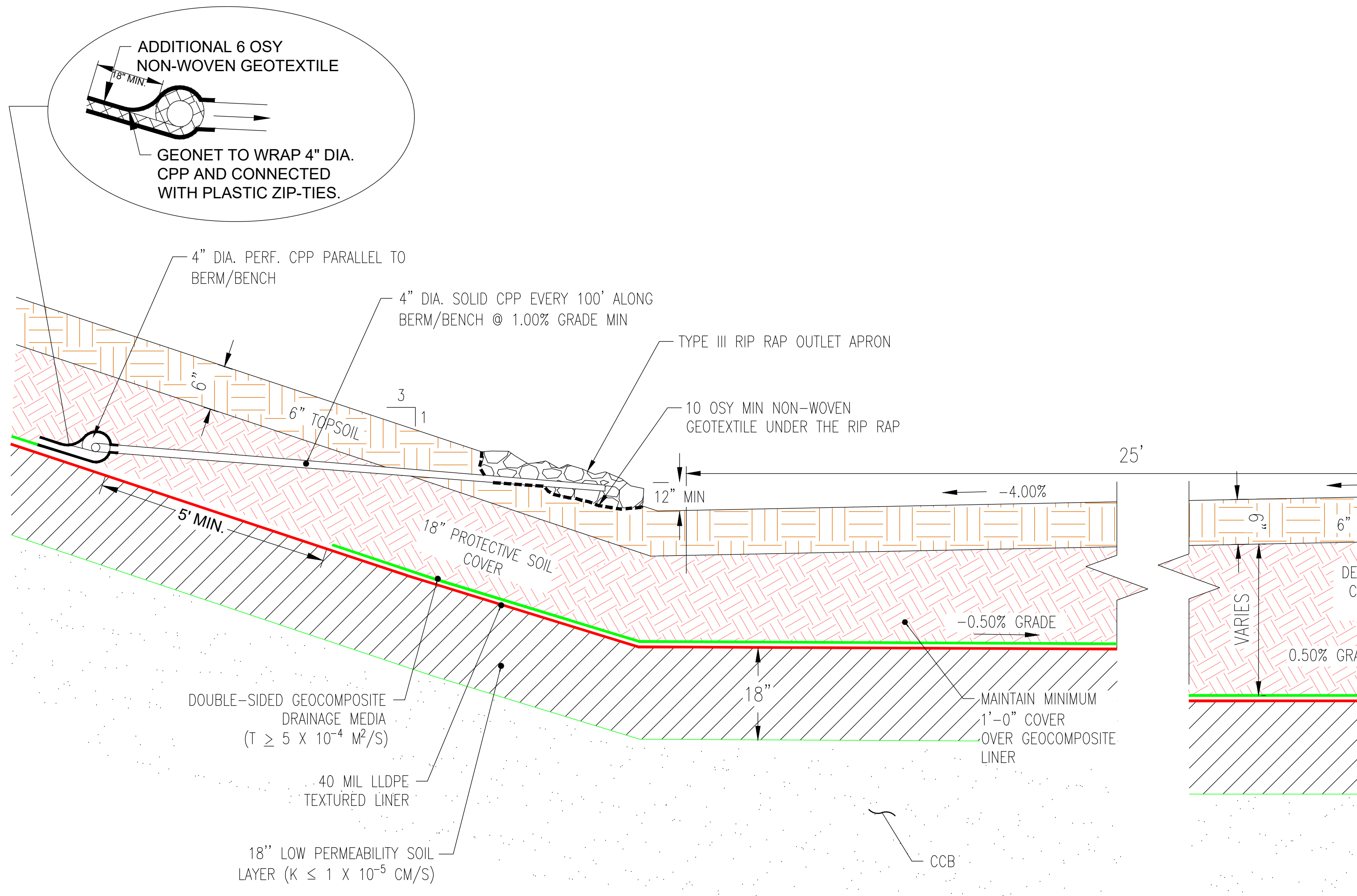
ADDITIONAL 6 OSY NON-WOVEN GEOTEXTILE
18" MIN
GEONET TO WRAP 4" DIA. CPP AND CONNECTED WITH PLASTIC ZIP-TIES.
4" DIA. PERF. CPP PARALLEL TO BERM/BENCH
4" DIA. SOLID CPP EVERY 100' ALONG BERM/BENCH @ 1.00% GRADE MIN
TYPE III RIP RAP OUTLET APRON
10 OSY MIN NON-WOVEN GEOTEXTILE UNDER THE RIP RAP
6"
6" TOPSOIL
3
1
12" MIN
25'
-4.00%
-4.00%
5' MIN.
18" PROTECTIVE SOIL COVER
-0.50% GRADE
18"
MAINTAIN MINIMUM 1'-0" COVER OVER GEOCOMPOSITE LINER
DOUBLE-SIDED GEOCOMPOSITE DRAINAGE MEDIA (T ≥ 5 X 10^-4 M²/S)
40 MIL LLDPE TEXTURED LINER
18'' LOW PERMEABILITY SOIL LAYER (K ≤ 1 X 10^-5 CM/S)
CCB
6"
6" TOPSOIL
DEPTH OF PROTECTIVE SOIL COVER VARIES FROM MIN. 18" TO 30"
VARIES
0.50% GRADE
18"
6"
40 MIL LLDPE TEXTURED LINER
18"
SEE FINAL COVER DETAIL, DWG. H1C11146

TYPICAL FINAL COVER SECTION V–V AT OUTLET LOCATIONS
N.T.S.
(THIS DWG.)

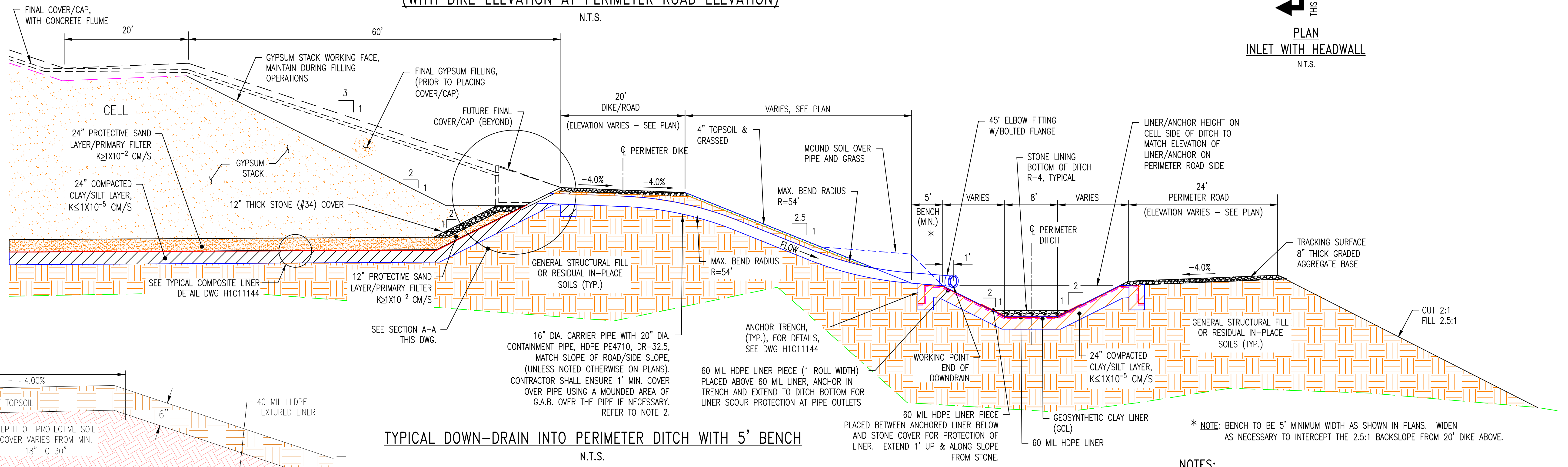
FINAL COVER/CAP, WITH CONCRETE FLUME
20'
60'
GYPSUM STACK WORKING FACE, MAINTAIN DURING FILLING OPERATIONS
FINAL GYPSUM FILLING, (PRIOR TO PLACING COVER/CAP)
3
1
FUTURE FINAL COVER/CAP (BEYOND)
CELL
24" PROTECTIVE SAND LAYER/PRIMARY FILTER K≥1X10^-2 CM/S
GYPSUM STACK
24" COMPACTED CLAY/SILT LAYER, K≤1X10^-5 CM/S
12" THICK STONE (#34) COVER
2
1
SEE TYPICAL COMPOSITE LINER DETAIL DWG H1C11144
12" PROTECTIVE SAND LAYER/PRIMARY FILTER K≥1X10^-2 CM/S
SEE SECTION A-A THIS DWG.
20' DIKE/ROAD (ELEVATION VARIES - SEE PLAN)
VARIES, SEE PLAN
℄ PERIMETER DIKE
4" TOPSOIL & GRASSED
MOUND SOIL OVER PIPE AND GRASS
-4.0%
-4.0%
MAX. BEND RADIUS R=54'
2.5
1
FLOW
MAX. BEND RADIUS R=54'
GENERAL STRUCTURAL FILL OR RESIDUAL IN-PLACE SOILS (TYP.)
16" DIA. CARRIER PIPE WITH 20" DIA. CONTAINMENT PIPE, HDPE PE4710, DR-32.5, MATCH SLOPE OF ROAD/SIDE SLOPE, (UNLESS NOTED OTHERWISE ON PLANS). CONTRACTOR SHALL ENSURE 1' MIN. COVER OVER PIPE USING A MOUNDED AREA OF G.A.B. OVER THE PIPE IF NECESSARY. REFER TO NOTE 2.
ANCHOR TRENCH, (TYP.), FOR DETAILS, SEE DWG H1C11144
60 MIL HDPE LINER PIECE (1 ROLL WIDTH) PLACED ABOVE 60 MIL LINER, ANCHOR IN TRENCH AND EXTEND TO DITCH BOTTOM FOR LINER SCOUR PROTECTION AT PIPE OUTLETS
45° ELBOW FITTING W/BOLTED FLANGE
STONE LINING BOTTOM OF DITCH R-4, TYPICAL
LINER/ANCHOR HEIGHT ON CELL SIDE OF DITCH TO MATCH ELEVATION OF LINER/ANCHOR ON PERIMETER ROAD SIDE
5' BENCH (MIN.) *
1'
VARIES
8'
VARIES
24' PERIMETER ROAD (ELEVATION VARIES - SEE PLAN)
℄ PERIMETER DITCH
2
1
-4.0%
TRACKING SURFACE 8" THICK GRADED AGGREGATE BASE
CUT 2:1
FILL 2.5:1
GENERAL STRUCTURAL FILL OR RESIDUAL IN-PLACE SOILS (TYP.)
WORKING POINT END OF DOWNDRAIN
24" COMPACTED CLAY/SILT LAYER, K≤1X10^-5 CM/S
60 MIL HDPE LINER PIECE PLACED BETWEEN ANCHORED LINER BELOW AND STONE COVER FOR PROTECTION OF LINER. EXTEND 1' UP & ALONG SLOPE FROM STONE.
GEOSYNTHETIC CLAY LINER (GCL)
60 MIL HDPE LINER

TYPICAL DOWN–DRAIN INTO PERIMETER DITCH WITH 5' BENCH
N.T.S.
(H1C11125, H1C11131 & H1C11153)

* NOTE: BENCH TO BE 5' MINIMUM WIDTH AS SHOWN IN PLANS. WIDEN AS NECESSARY TO INTERCEPT THE 2.5:1 BACKSLOPE FROM 20' DIKE ABOVE.

NOTES:

1. THE SECTIONS SHOWN ON THIS DRAWING REPRESENT TYPICAL CONFIGURATIONS FOR THE CELLS, PERIMETER DITCHES, LEACHATE COLLECTION SYSTEM, AND SEDIMENT BASIN. ACTUAL CONDITIONS WILL VARY TO INCLUDE BOTH CUT AND FILL AREAS, THEREFORE THE SUBGRADE MATERIAL FOR THE CLAY LINER COULD CONSIST OF EITHER RESIDUAL, IN-PLACE SOILS OR GENERAL STRUCTURAL FILL. REFERENCE THE CONSTRUCTION SPECIFICATIONS FOR PROOF-ROLLING CRITERIA FOR IN-PLACE SOILS AND THE PLACEMENT AND COMPACTION CRITERIA FOR GENERAL STRUCTURAL FILL.
2. THE MOUNDED AREA OVER THE 20" CONTAINMENT PIPE SHALL EXTEND A MINIMUM OF 10' ON EITHER SIDE OF THE PIPE AND MATCH THE WIDTH OF THE PERIMETER DIKE ROADWAY.

REFERENCES:

H1C11120	TITLE SHEET AND DRAWING INDEX
H1C11132	CELL NO. 1 & 2 COMBINED FINAL STACKING PLAN
H1C11134	CELL NO. 3 FINAL STACKING PLAN
H1C11144	CELL NO. 1 THROUGH CELL NO. 3, MISCELLANEOUS DETAILS, SHEET 2
H1C11146	CELL NO. 1 THROUGH CELL NO. 3, MISCELLANEOUS SECTIONS AND DETAILS, SHEET 1
H1C11152	FLUME DATA SHEET

GEORGIA
DEPARTMENT OF NATURAL RESOURCES
ENVIRONMENTAL PROTECTION DIVISION
Approved
Solid Waste Management Program
Approved By: Keith Stevens Digitally signed by Keith Stevens Date: 2022.10.25 08:59:48 -04'00'

NO. 27185 R. BRANT LANE 9/27/22

9/27/22

Southern Company Generation
Engineering and Construction Services
FOR
Georgia Power Company

PLANT WANSLEY
COAL COMBUSTION RESIDUALS (CCR) LANDFILL
CELL NO. 1 THROUGH CELL NO. 3
MISCELLANOUS SECTIONS AND DETAILS
SHEET 3

REVISION	DATE
REVISION 0	DATE 09-23-2022
CCR LF PERMIT APPLICATION [BY HHNT, INC.]	

BY	CHK'D	CIVIL APPR	ELECT APPR	I/C APPR	MECH APPR	DISC MGR
ANR	RBL		☒	☒	☒	☒

SCALE	DRAWING NUMBER	SHEET	CONT'D	REV
N.T.S.	H1C11148	1	FINAL	0

Acad2004 ANSI F: 40x28

DESIGNED Q10/24 (CFS)	MINIMUM LENGTH "L" (FEET)
UP TO 10	10
11 TO 20	20
21 TO 30	30
31 TO 40	40
41 TO 50	50

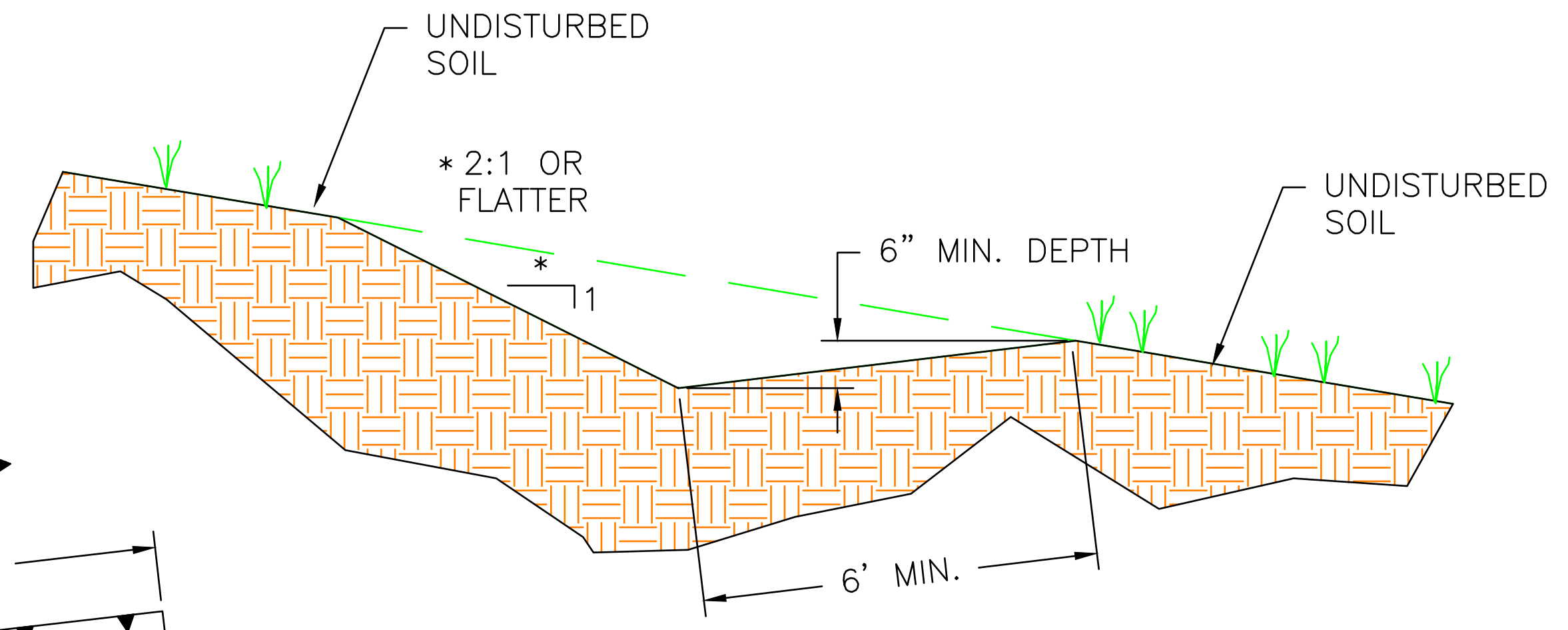
UNDISTURBED SOIL
* 2:1 OR FLATTER
*
1
6" MIN. DEPTH
UNDISTURBED SOIL
6' MIN.

SECTION A-A

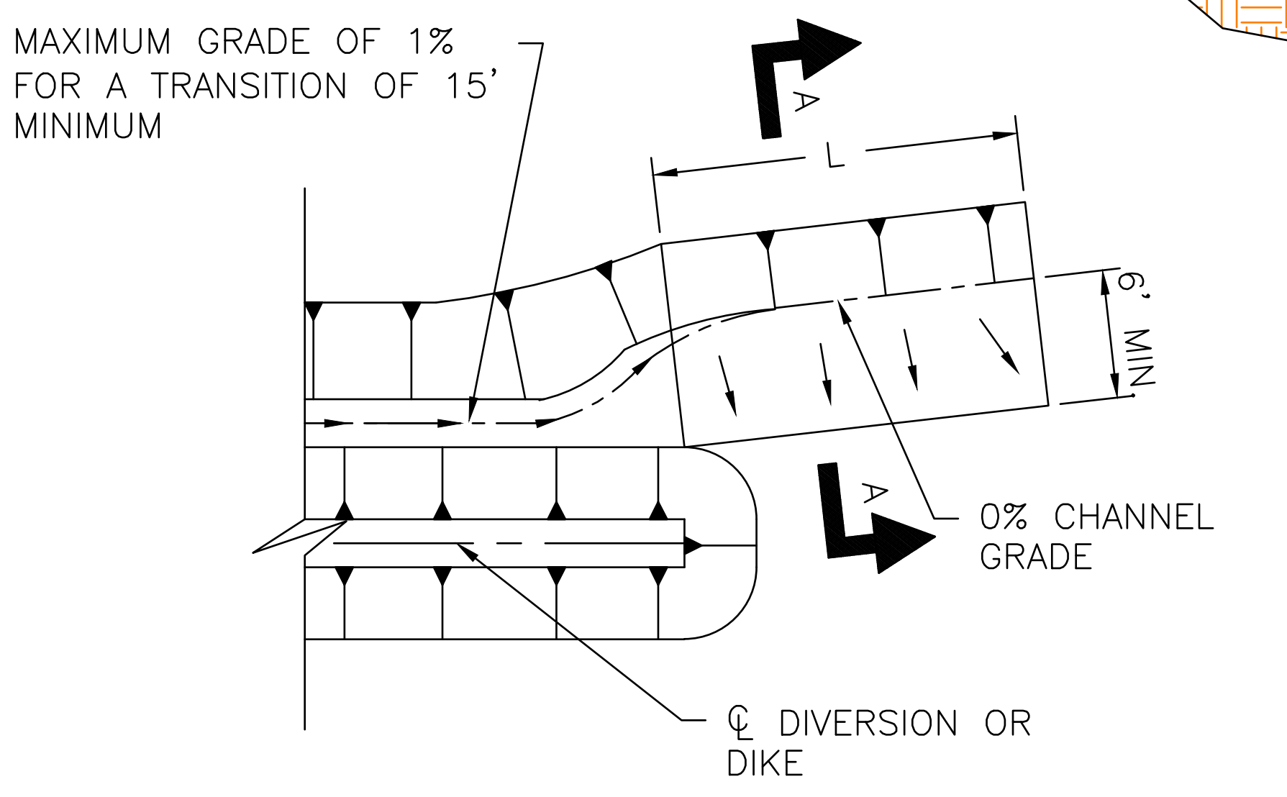
MAXIMUM GRADE OF 1% FOR A TRANSITION OF 15' MINIMUM
A
L
6' MIN.
A
0% CHANNEL GRADE
℄ DIVERSION OR DIKE

PLAN

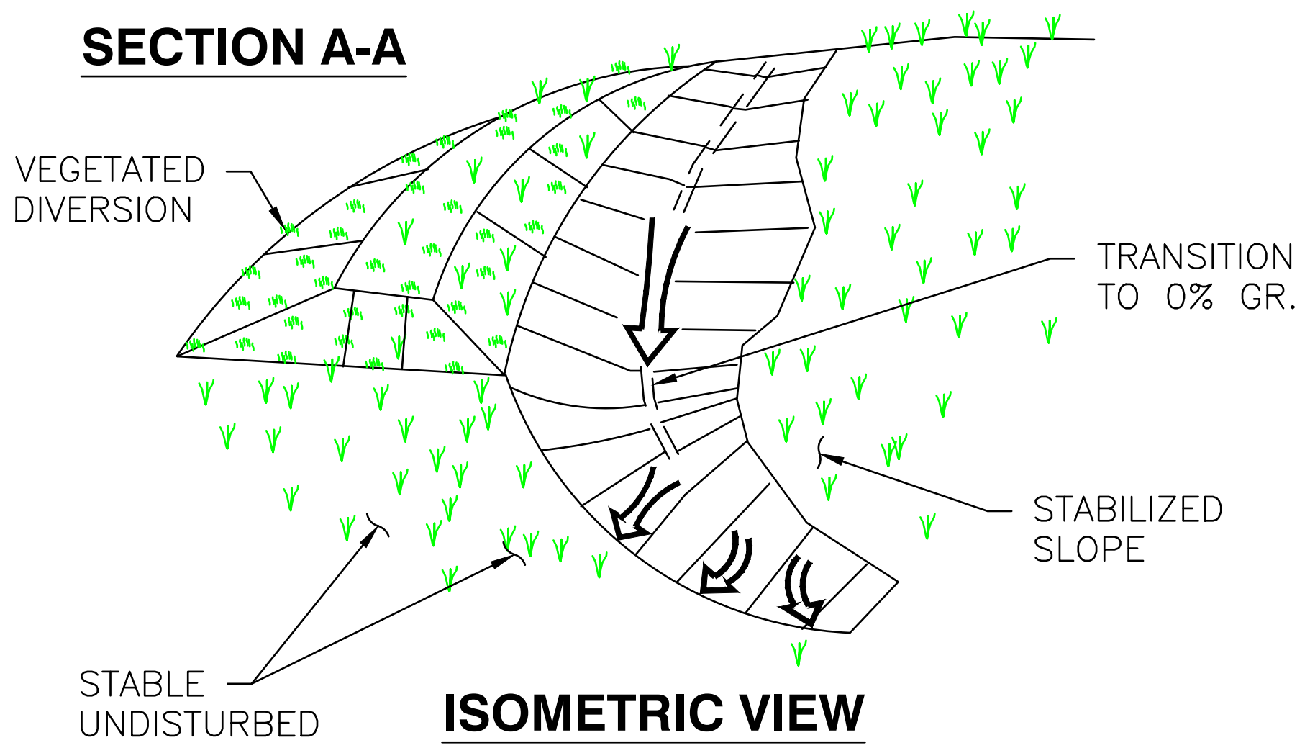
VEGETATED DIVERSION
TRANSITION TO 0% GR.
STABILIZED SLOPE
STABLE UNDISTURBED OUTLET

ISOMETRIC VIEW

NOTES:
1. GRADE OF CHANNEL FOR LAST 15 FEET OF THE DIKE OR DIVERSION ENTERING THE LEVEL SPREADER SHALL BE LESS THAN OR EQUAL TO 1%.
2. LEVEL SPREADERS MUST BE CONSTRUCTED ON UNDISTURBED SOIL.

TYPICAL LEVEL SPREADER DETAIL

N.T.S.

Lv

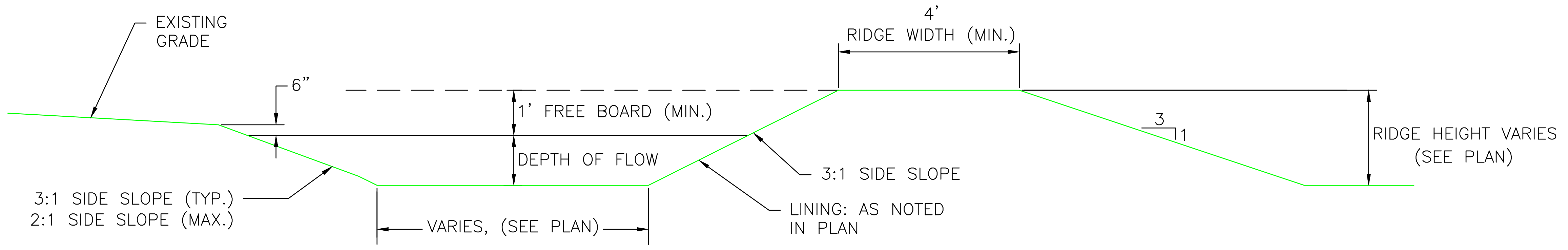
EXISTING GRADE
6"
4' RIDGE WIDTH (MIN.)
1' FREE BOARD (MIN.)
DEPTH OF FLOW
3
1
RIDGE HEIGHT VARIES (SEE PLAN)
3:1 SIDE SLOPE (TYP.)
2:1 SIDE SLOPE (MAX.)
VARIES, (SEE PLAN)
3:1 SIDE SLOPE
LINING: AS NOTED IN PLAN

NOTES:
1. ALL TREES, BRUSH, STUMPS, OBSTRUCTIONS, AND OTHER OBJECTIONABLE MATERIAL SHALL BE REMOVED AND DISPOSED OF SO AS NOT TO INTERFERE WITH THE PROPER FUNCTIONING OF THE DIVERSION.
2. THE DIVERSION SHALL BE EXCAVATED OR SHAPED TO LINE, GRADE, AND CROSS SECTION AS REQUIRED TO MEET THE CRITERIA SPECIFIED HEREIN AND FREE OF IRREGULARITIES WHICH WILL IMPEDE NORMAL FLOW.
3. ALL FILLS SHALL BE MACHINE COMPACTED TO PREVENT UNEQUAL SETTLEMENT THAT WOULD CAUSE DAMAGE IN THE COMPLETED DIVERSION.
4. ALL EARTH REMOVED AND NOT NEEDED IN CONSTRUCTION SHALL BE SPREAD OR DISPOSED OF SO THAT IT WILL NOT INTERFERE WITH THE FUNCTIONING OF THE DIVERSION.
5. DIVERSION CHANNEL SHALL BE STABILIZED TO PREVENT MIGRATION OF SOIL FROM DITCH AND/OR BERM.

DIVERSION DETAIL (EXCAVATION PHASE)

N.T.S.

Di

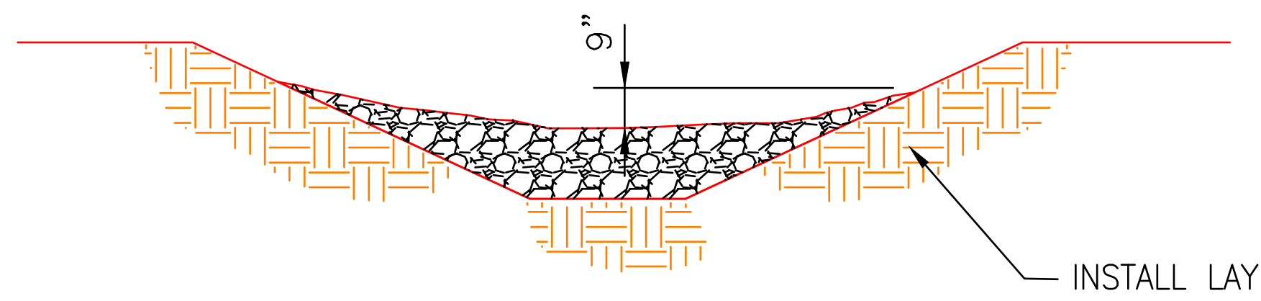

DITCH ELEVATION

N.T.S.

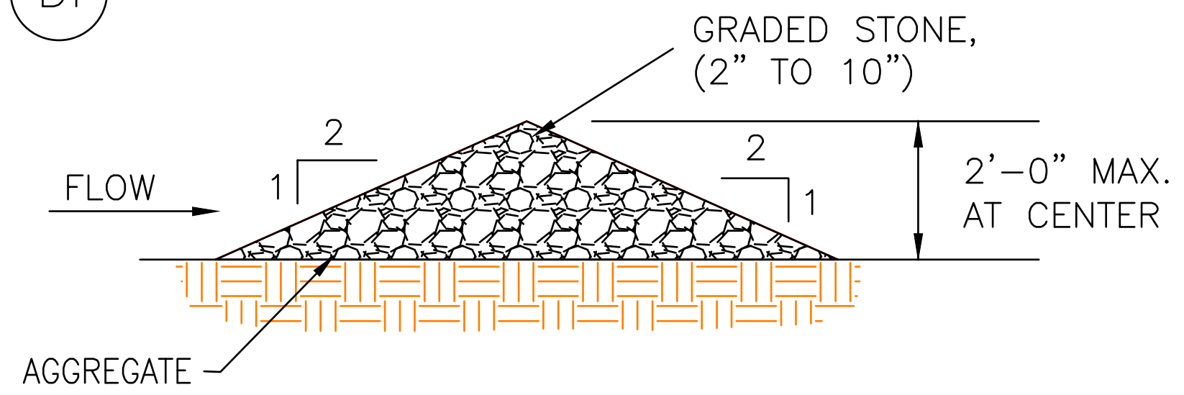
GRADED STONE, (2" TO 10")
FLOW
2
1
2
1
2'-0" MAX. AT CENTER

INSTALL LAYER OF FILTER FABRIC BETWEEN AGGREGATE OF STONE CHECK DAM AND EXISTING GROUND TO PREVENT EROSION AT CHECK DAMS. FILTER FABRIC SHALL MEET THE REQUIREMENTS OF AASHTO M288-96, SECTION 7.3, TABLE 3. FILTER FABRIC SHALL EXTEND FIVE FEET (5') PAST TOE OF LAST CHECK DAM.

END ELEVATION

N.T.S.

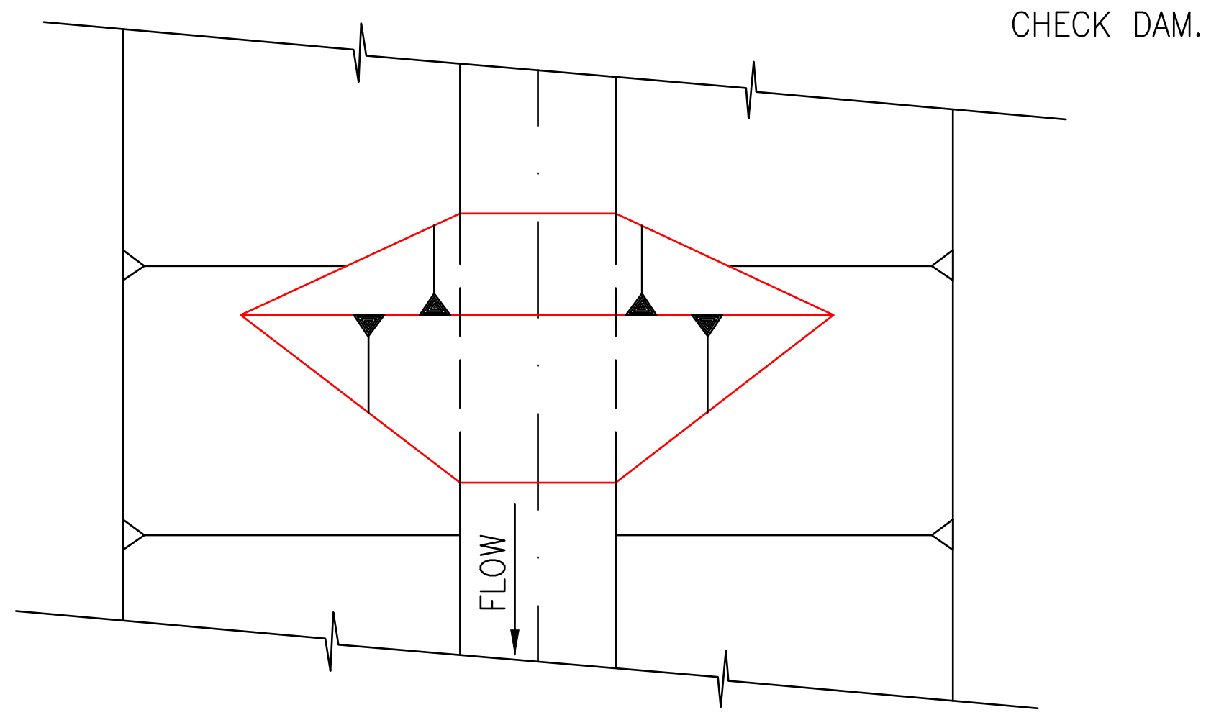

PLAN

N.T.S.

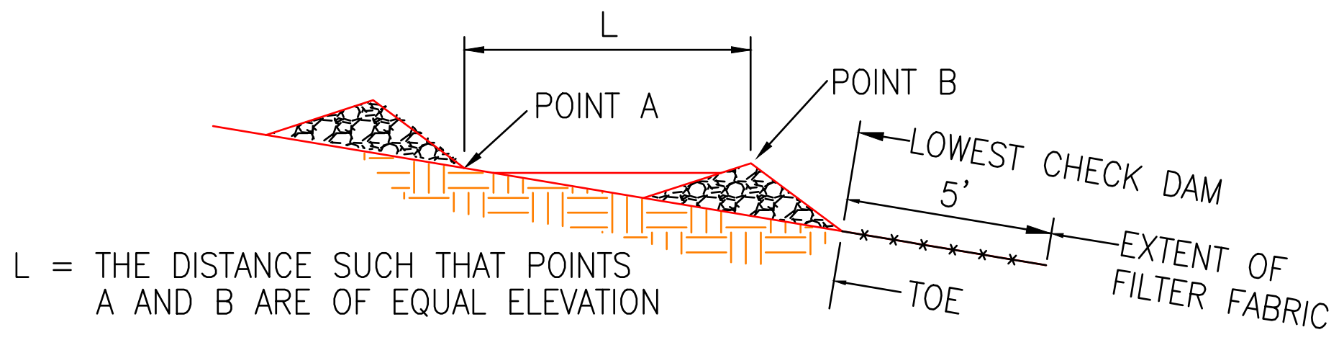
L
POINT A
POINT B
LOWEST CHECK DAM
5'
EXTENT OF FILTER FABRIC
TOE

L = THE DISTANCE SUCH THAT POINTS A AND B ARE OF EQUAL ELEVATION

SPACING BETWEEN CHECK DAMS

N.T.S.

NOTE:
USE WHERE INDICATED ON PLANS AND AS REQUIRED. CHECK DAMS ARE NOT TO BE USED IN LIVE STREAMS.

TYPICAL STONE CHECK DAM

N.T.S.

Cd-S

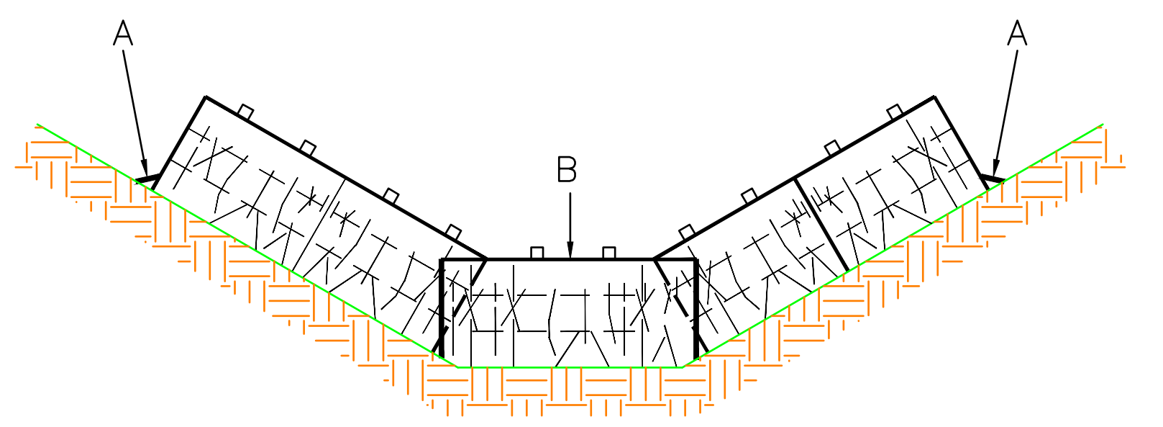

NOTES:
1. POINTS "A" SHOULD BE HIGHER THAN POINT "B".
2. EMBED HAY BALES A MINIMUM OF 4 INCHES.
3. HAY BALES ARE TO BE BOUND WITH WIRE OR NYLON.
4. EACH BALE SHALL BE CONSTRAINED BY TWO 2"x 2" WOODEN STAKES OR TWO 1/2" ø STEEL REINFORCING BARS EMBEDDED 2 FT. IN THE GROUND.
5. HAY BALE CHECK DAMS SHALL BE INSPECTED PERIODICALLY AND PROMPTLY REPAIRED OR REPLACED AS REQUIRED.
6. SEDIMENT BEHIND CHECK DAM SHALL BE REMOVED WHEN IT REACHES A DEPTH OF ONE-HALF THE ORIGINAL DEPTH OF CHECK DAM OR BEFORE.

PLACEMENT OF HAY BALE BARRIER IN DRAINAGE WAY

N.T.S.

Sd1-Hb

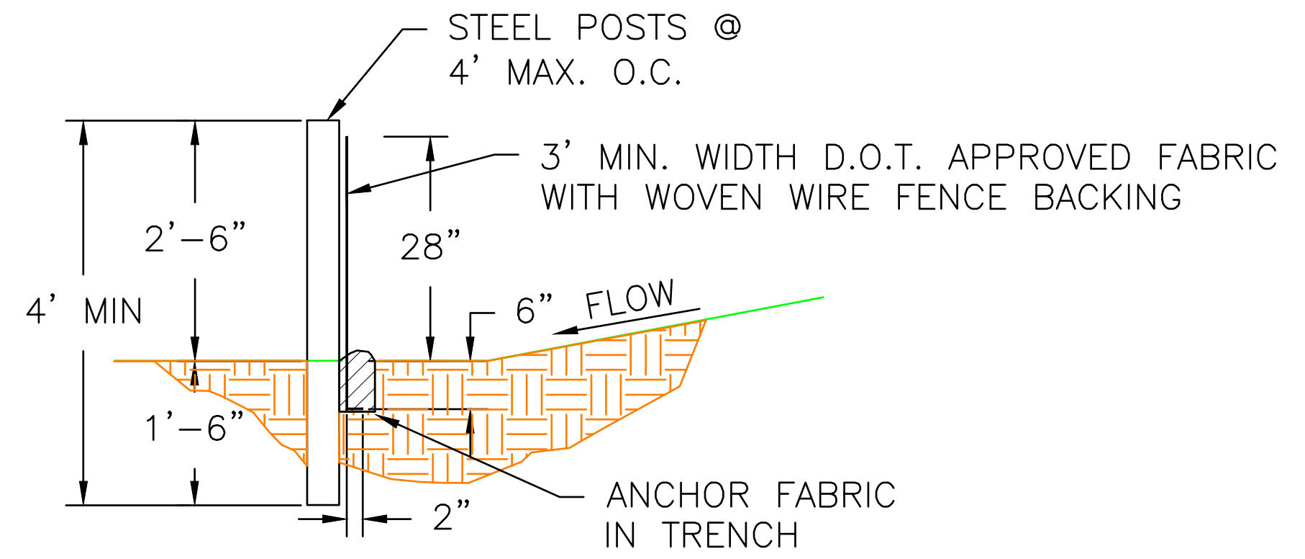
STEEL POSTS @ 4' MAX. O.C.
3' MIN. WIDTH D.O.T. APPROVED FABRIC WITH WOVEN WIRE FENCE BACKING
2'-6"
28"
4' MIN
6"
FLOW
1'-6"
2"
ANCHOR FABRIC IN TRENCH

NOTE:
THE SILT FENCE SHALL BE INSPECTED PERIODICALLY AND PROMPTLY REPAIRED OR REPLACED AS REQUIRED. FILTER FABRIC SHALL BE REPLACED WHENEVER IT HAS DETERIORATED TO SUCH AN EXTENT THAT IT REDUCES THE EFFECTIVENESS OF THE FABRIC

TYPICAL SILT FENCE DETAIL TYPE "C"

N.T.S.

Sd1-C

EROSION CONTROL NOTES:

1. EROSION CONTROL MEASURES FOR THIS PROJECT SHALL BE IN COMPLIANCE WITH THE GEORGIA SOIL AND WATER CONSERVATION COMMISSION'S "MANUAL FOR EROSION AND SEDIMENT CONTROL OF GEORGIA", CURRENT EDITION.
2. PRIOR TO THE COMMENCEMENT OF CLEARING AND GRUBBING OPERATIONS, AND OTHER EARTHWORK ACTIVITIES, THE INITIAL EROSION CONTROL MEASURES SHOWN ON THE PLANS SHALL BE IN-PLACE AND FULLY OPERATIONAL.
3. CONSTRUCTION OPERATIONS SHALL NOT ENCROACH UPON THE STREAM AND WETLAND BUFFERS OR THE 200' UNDISTURBED SITE BUFFER. SEDIMENT FROM CONSTRUCTION ACTIVITY SHALL BE PREVENTED FROM ENTERING BUFFERS.
4. EROSION CONTROL BMP'S SHOWN ON THE PLAN ARE NOT INCLUSIVE OF ALL CONDITIONS/OPERATIONS WHICH MAY OCCUR DURING THE DURATION OF THE PROJECT. ADDITIONAL MEASURES SHALL BE REQUIRED TO PREVENT TRANSPORT OF SEDIMENT FROM THE SITE. CONTRACTOR SHALL SCHEDULE CLEARING AND GRUBBING, AND EARTHWORK OPERATIONS SO AS TO MINIMIZE THE AREA OF SOIL EXPOSED AT ANY ONE TIME DURING THE PROJECT. SEE "SILT FENCE/HAY BALE BARRIER NOTES" ON THIS DRAWING FOR ADDITIONAL BMP'S REQUIRED FOR CLEARING AND GRUBBING AND GRADING OF AREAS WHICH DO NOT DRAIN INTO TEMPORARY SEDIMENT BASINS.
5. SURFACES OF ALL GRASSED SLOPES CONSTRUCTED AT 2.5:1 (2.5 HORIZ TO 1 VERTICAL) AND STEEPER SHALL BE REINFORCED WITH A PERMANENT, NON-DEGRADEABLE "POLYMER NET" EROSION CONTROL MATTING. MATTING SHALL BE LISTED IN THE GEORGIA DOT QUALIFIED PRODUCTS LIST (QPL#49).
6. PERIODIC INSPECTION AND MAINTENANCE OF BMP'S SHALL BE PROVIDED DURING THE LIFE OF THE PROJECT TO ENSURE SEDIMENT TRAPPING EFFICIENCIES ARE ADEQUATE. THE TEMPORARY SEDIMENT BASIN LOCATED AT THE FUTURE NORTH SEDIMENT POND SHALL BE INSPECTED AND MAINTAINED FOR THE DURATION OF PHASE 1, CELL 1 GYPSUM FILLING OPERATIONS AND UNTIL CELL 2 HAS BEEN BASE GRADED AND READY TO RECEIVE LINER(S).
7. EROSION CONTROL MEASURES WILL BE MAINTAINED AT ALL TIMES. IF FULL IMPLEMENTATION OF THE EROSION CONTROL MEASURES DOES NOT PROVIDE FOR EFFECTIVE EROSION CONTROL [illegible] WILL BE IMPLEMENTED TO CONTROL OR TREAT THE SEDIMENT SOURCE.

GEORGIA
DEPARTMENT OF NATURAL RESOURCES
ENVIRONMENTAL PROTECTION DIVISION
Approved
Solid Waste Management Program
Approved By: Keith Stevens
Digitally signed by Keith Stevens Date: 2022.10.25 08:59:48 -04'00'

NO. 27185
9/27/22
9/27/22

REFERENCES:

H1C11120 TITLE SHEET AND DRAWING INDEX
H1C11125 CELL NO. 1, SITE DEVELOPMENT, BASE GRADING PLAN
H1C11127 SECURITY ROAD LAYOUT AND GRADING PLAN
H1C11126 CELL NO. 2, ROUGH SITE GRADING PLAN
H1C11130 CELL NO. 1, FINAL STACKING PLAN
H1C11131 CELL NO. 2, SITE DEVELOPMENT, BASE GRADING PLAN
H1C11132 CELL NO. 2, FINAL STACKING PLAN
H1C11133 CELL NO. 3 SITE DEVELOPMENT, BASE GRADING PLAN
H1C11134 CELL NO. 3, FINAL STACKING PLAN
H1C11145 CELL NO. 1 THROUGH CELL NO. 3 MISCELLANEOUS SECTIONS, SHEET 3

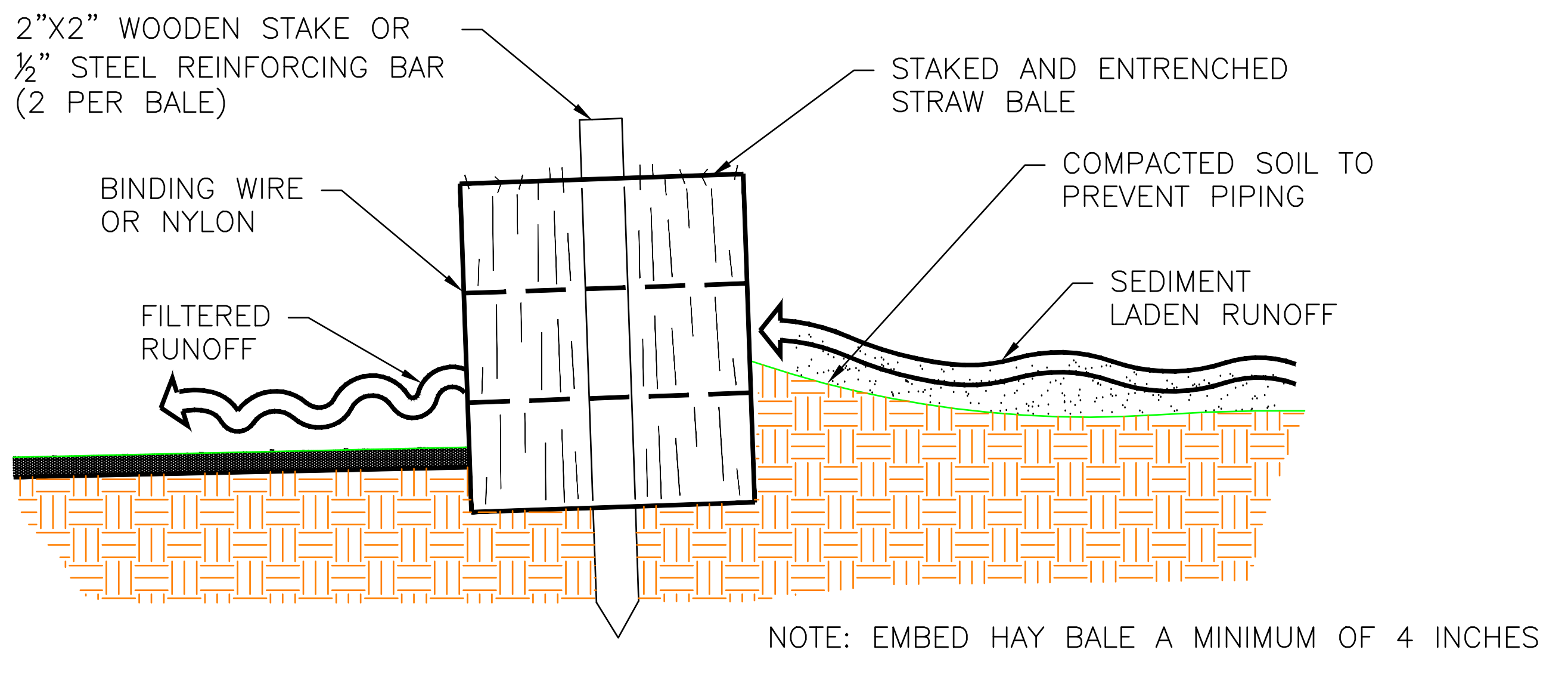
2"X2" WOODEN STAKE OR ½" STEEL REINFORCING BAR (2 PER BALE)
STAKED AND ENTRENCHED STRAW BALE
BINDING WIRE OR NYLON
COMPACTED SOIL TO PREVENT PIPING
FILTERED RUNOFF
SEDIMENT LADEN RUNOFF

NOTE: EMBED HAY BALE A MINIMUM OF 4 INCHES

CROSS SECTION OF INSTALLED HAY BALE

N.T.S.

Sd1-Hb

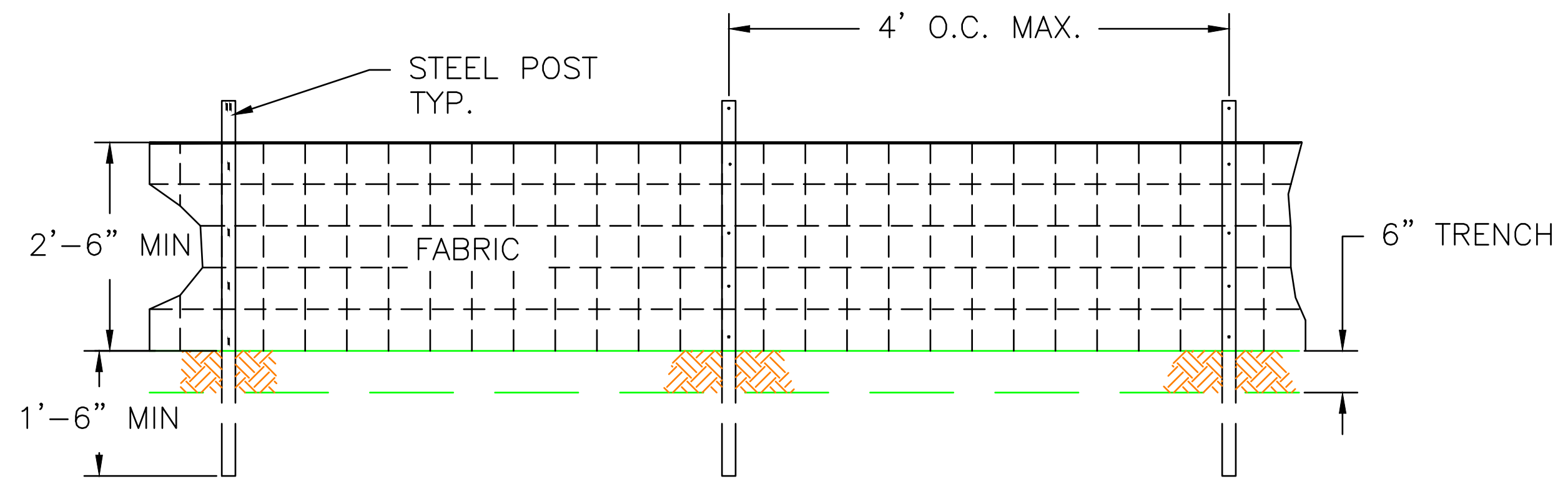
STEEL POST TYP.
4' O.C. MAX.
2'-6" MIN
FABRIC
6" TRENCH
1'-6" MIN

NOTE:
USE 36" G.D.O.T. APPROVED FABRIC USE STEEL POSTS

TYPICAL SILT FENCE FRONT VIEW

SCALE: 1"=2'

Sd1-C

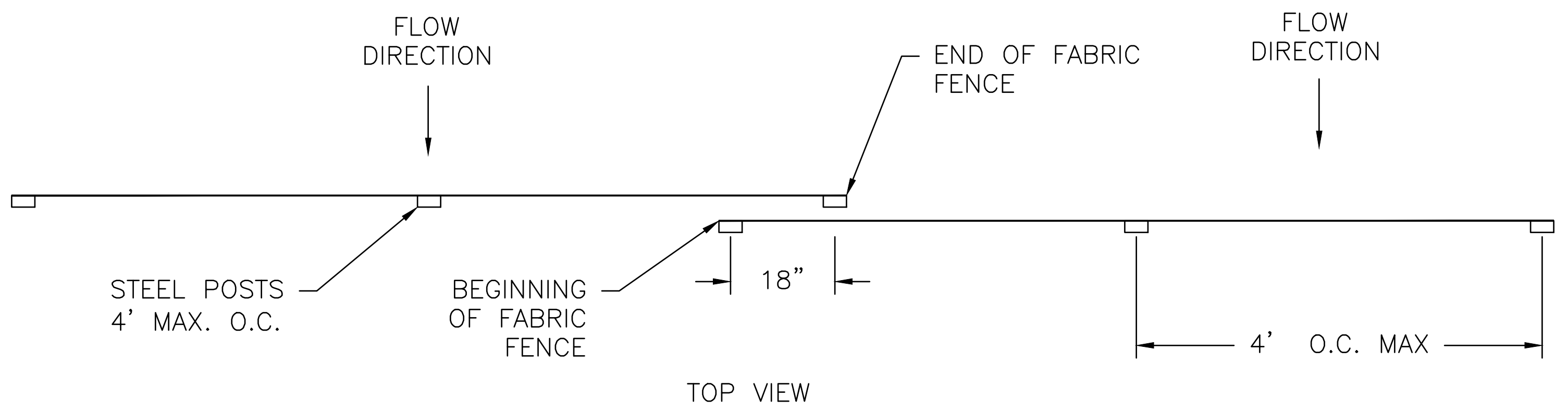
FLOW DIRECTION
END OF FABRIC FENCE
FLOW DIRECTION
STEEL POSTS 4' MAX. O.C.
BEGINNING OF FABRIC FENCE
18"
4' O.C. MAX
TOP VIEW

TYPICAL SILT FENCE TYPE C- OVERLAP DETAIL

N.T.S.

Sd1-C

SILT FENCE/HAY BALE BARRIER NOTES:
1. ALL SILT FENCE SHOWN ON THE PLANS IS TO BE DOUBLE ROW TYPE"C" BARRIER. CONTRACTOR SHALL MAINTAIN FENCE AT THESE LOCATIONS DURING CONSTRUCTION OF CELLS UNTIL FINAL SURFACE TREATMENTS HAVE BEEN APPLIED AND A SUFFICIENT STAND OF GRASS HAS BEEN ESTABLISHED AS DETERMINED BY THE SITE ENGINEER.
2. ADDITIONAL SILT FENCE (OR HAY BALES) SHALL BE REQUIRED IN AREAS WHICH ARE CLEARED OR GRADED AND DO NOT HAVE STORMWATER RUNOFF DIVERTED TO SEDIMENT BASINS MEETING THE CRITERIA LISTED IN THE TABLES BELOW. THE DRAINAGE AREA SHALL NOT EXCEED 1/4 ACRE FOR EVERY 100 FEET OF SILT FENCE.

CRITERIA FOR SILT FENCE PLACEMENT

LAND SLOPE (PERCENT)	MAXIMUM LENGTH OF SLOPE ABOVE FENCE (FEET)
<2	100
2 TO 5	75
5 TO 10	50
10 TO 20	25
>20	15

CRITERIA FOR HAY BALE PLACEMENT

LAND SLOPE (PERCENT)	MAXIMUM LENGTH OF SLOPE ABOVE FENCE (FEET)
<2	75
2 TO 5	50
5 TO 10	35
10 TO 20	20
>20	10

REVISION 0 DATE 09-23-2022
CCR LF PERMIT APPLICATION [BY HHNT, INC.]
BY ANR CHK'D RBL

Southern Company Generation
Engineering and Construction Services
FOR
Georgia Power Company

PLANT WANSLEY
COAL COMBUSTION BY-PRODUCT DISPOSAL FACILITY
CELL 1 THROUGH CELL 3
EROSION CONTROL SECTIONS & DETAILS
SHEET 1

SCALE	PROJ I.D.	DRAWING NUMBER	SHEET	CONT'D	REV
AS NOTED	010209	**H1C11149**	1	FINAL	0

ANSI F: 40x28 Acad2004

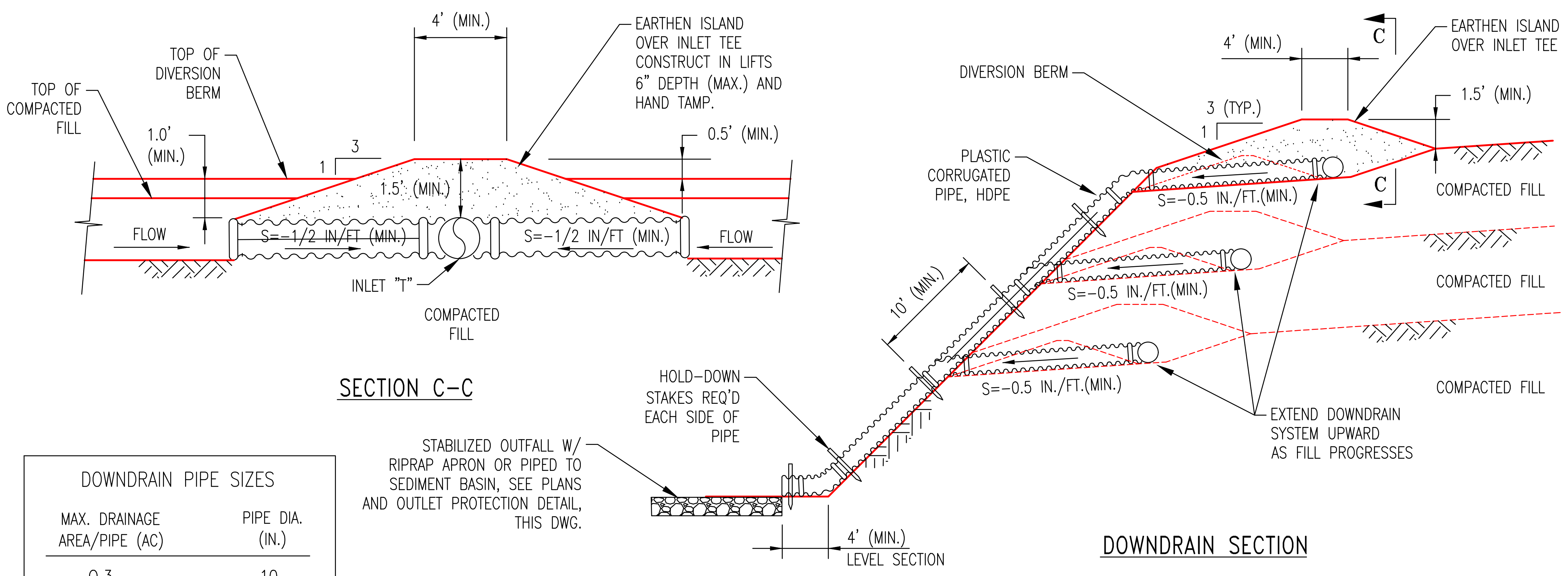
TOP OF COMPACTED FILL
TOP OF DIVERSION BERM
4' (MIN.)
EARTHEN ISLAND OVER INLET TEE CONSTRUCT IN LIFTS 6" DEPTH (MAX.) AND HAND TAMP.
1.0' (MIN.)
3
1
1.5' (MIN.)
0.5' (MIN.)
FLOW
S=-1/2 IN/FT (MIN.)
S=-1/2 IN/FT (MIN.)
FLOW
INLET "T"
COMPACTED FILL
DIVERSION BERM
PLASTIC CORRUGATED PIPE, HDPE
4' (MIN.)
C
EARTHEN ISLAND OVER INLET TEE
1.5' (MIN.)
3 (TYP.)
1
S=-0.5 IN./FT.(MIN.)
COMPACTED FILL
10' (MIN.)
S=-0.5 IN./FT.(MIN.)
COMPACTED FILL
S=-0.5 IN./FT.(MIN.)
COMPACTED FILL
HOLD-DOWN STAKES REQ'D EACH SIDE OF PIPE
EXTEND DOWNDRAIN SYSTEM UPWARD AS FILL PROGRESSES
STABILIZED OUTFALL W/ RIPRAP APRON OR PIPED TO SEDIMENT BASIN, SEE PLANS AND OUTLET PROTECTION DETAIL, THIS DWG.
4' (MIN.)
LEVEL SECTION

SECTION C-C

DOWNDRAIN SECTION

DOWNDRAIN PIPE SIZES

MAX. DRAINAGE AREA/PIPE (AC)	PIPE DIA. (IN.)
0.3	10
0.5	12
1.0	18

NOTE: ALL PIPE CONNECTIONS SHALL BE WATERTIGHT AND SECURE TO PREVENT SEPARATION DURING USE.

TEMPORARY SLOPE DRAIN
N.T.S.
Dn1

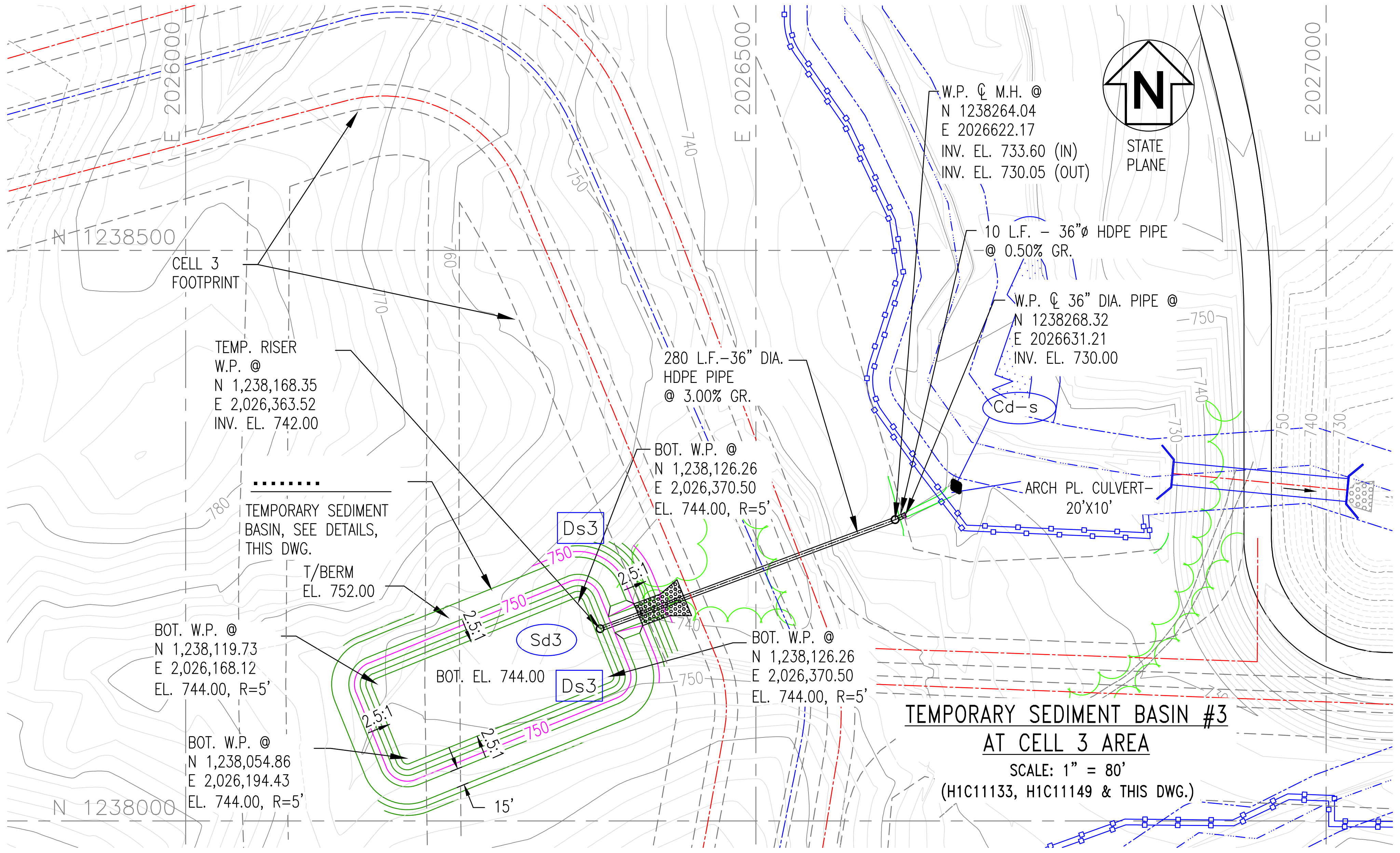
E 2026000
E 2026500
E 2027000
N 1238500
N 1238000
740
750
760
770
780
CELL 3 FOOTPRINT
TEMP. RISER W.P. @ N 1,238,168.35 E 2,026,363.52 INV. EL. 742.00
TEMPORARY SEDIMENT BASIN, SEE DETAILS, THIS DWG.
T/BERM EL. 752.00
BOT. W.P. @ N 1,238,119.73 E 2,026,168.12 EL. 744.00, R=5'
BOT. W.P. @ N 1,238,054.86 E 2,026,194.43 EL. 744.00, R=5'
BOT. EL. 744.00
Ds3
Sd3
Ds3
2.5:1
2.5:1
2.5:1
2.5:1
15'
BOT. W.P. @ N 1,238,126.26 E 2,026,370.50 EL. 744.00, R=5'
BOT. W.P. @ N 1,238,126.26 E 2,026,370.50 EL. 744.00, R=5'
280 L.F.-36" DIA. HDPE PIPE @ 3.00% GR.
W.P. ℄ M.H. @ N 1238264.04 E 2026622.17 INV. EL. 733.60 (IN) INV. EL. 730.05 (OUT)
10 L.F. - 36"ø HDPE PIPE @ 0.50% GR.
W.P. ℄ 36" DIA. PIPE @ N 1238268.32 E 2026631.21 INV. EL. 730.00
Cd-s
ARCH PL. CULVERT- 20'X10'
N
STATE PLANE

TEMPORARY SEDIMENT BASIN #3
AT CELL 3 AREA
SCALE: 1" = 80'
(H1C11133, H1C11149 & THIS DWG.)

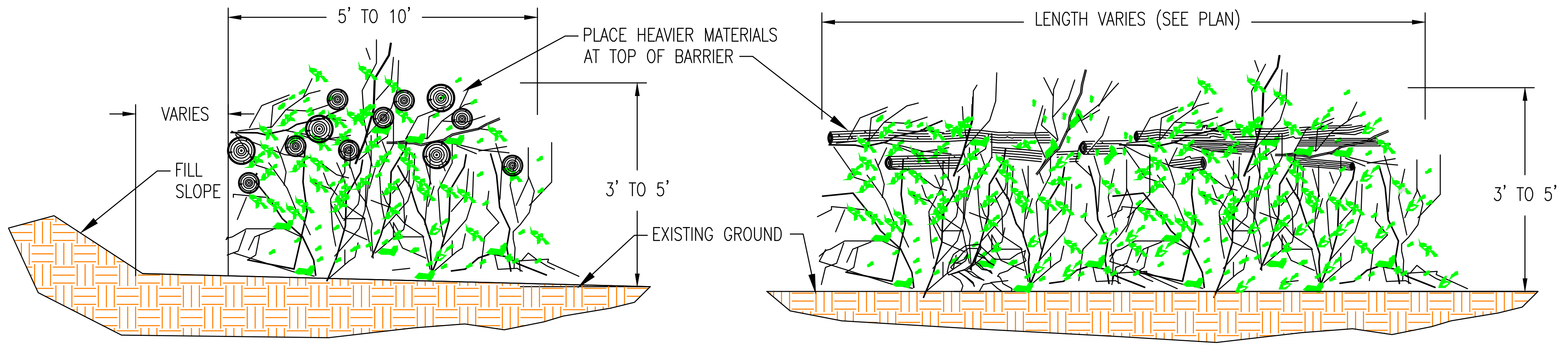
5' TO 10'
PLACE HEAVIER MATERIALS AT TOP OF BARRIER
VARIES
FILL SLOPE
3' TO 5'
EXISTING GROUND
LENGTH VARIES (SEE PLAN)
3' TO 5'

SECTION
N.T.S.

FRONT VIEW
N.T.S.

NOTES:
1. INTERMINGLE BRUSH, LOGS, ETC., SO AS NOT TO FORM A SOLID DAM.
2. REMOVE SOIL FROM STUMPS, LOGS, ETC.. PRIOR TO PLACING IN BARRIER.

BRUSH BARRIER DETAIL
N.T.S.
Sd1-Bb

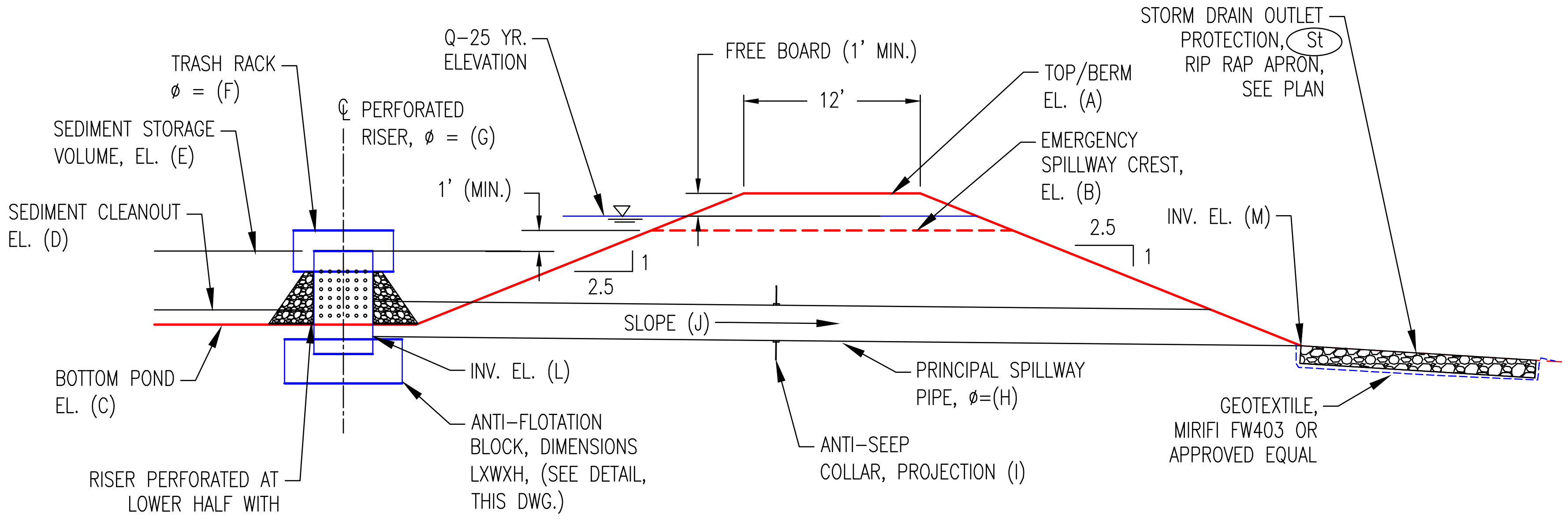
TRASH RACK ø = (F)
SEDIMENT STORAGE VOLUME, EL. (E)
SEDIMENT CLEANOUT EL. (D)
℄ PERFORATED RISER, ø = (G)
Q-25 YR. ELEVATION
1' (MIN.)
FREE BOARD (1' MIN.)
12'
TOP/BERM EL. (A)
EMERGENCY SPILLWAY CREST, EL. (B)
STORM DRAIN OUTLET PROTECTION, St RIP RAP APRON, SEE PLAN
2.5
1
2.5
1
INV. EL. (M)
SLOPE (J)
BOTTOM POND EL. (C)
INV. EL. (L)
PRINCIPAL SPILLWAY PIPE, ø=(H)
ANTI-FLOTATION BLOCK, DIMENSIONS LXWXH, (SEE DETAIL, THIS DWG.)
ANTI-SEEP COLLAR, PROJECTION (I)
GEOTEXTILE, MIRIFI FW403 OR APPROVED EQUAL
RISER PERFORATED AT LOWER HALF WITH 1/2 INCH HOLES SPACED APPROX. 3 INCHES APART. COVERED AROUND PERI-METER WITH TWO FOOT THICKNESS OF 3 TO 4 INCH STONE

TEMPORARY CONSTRUCTION SEDIMENT BASIN
RISER SECTION
Sd3
(PONDS #1&2)
N.T.S.

NOTE:
ENTRANCE SHALL BE INSTALLED AND MAINTAINED SUCH THAT TRACKING OF MUD ONTO THE PLANT/PUBLIC ROAD SHALL BE PREVENTED

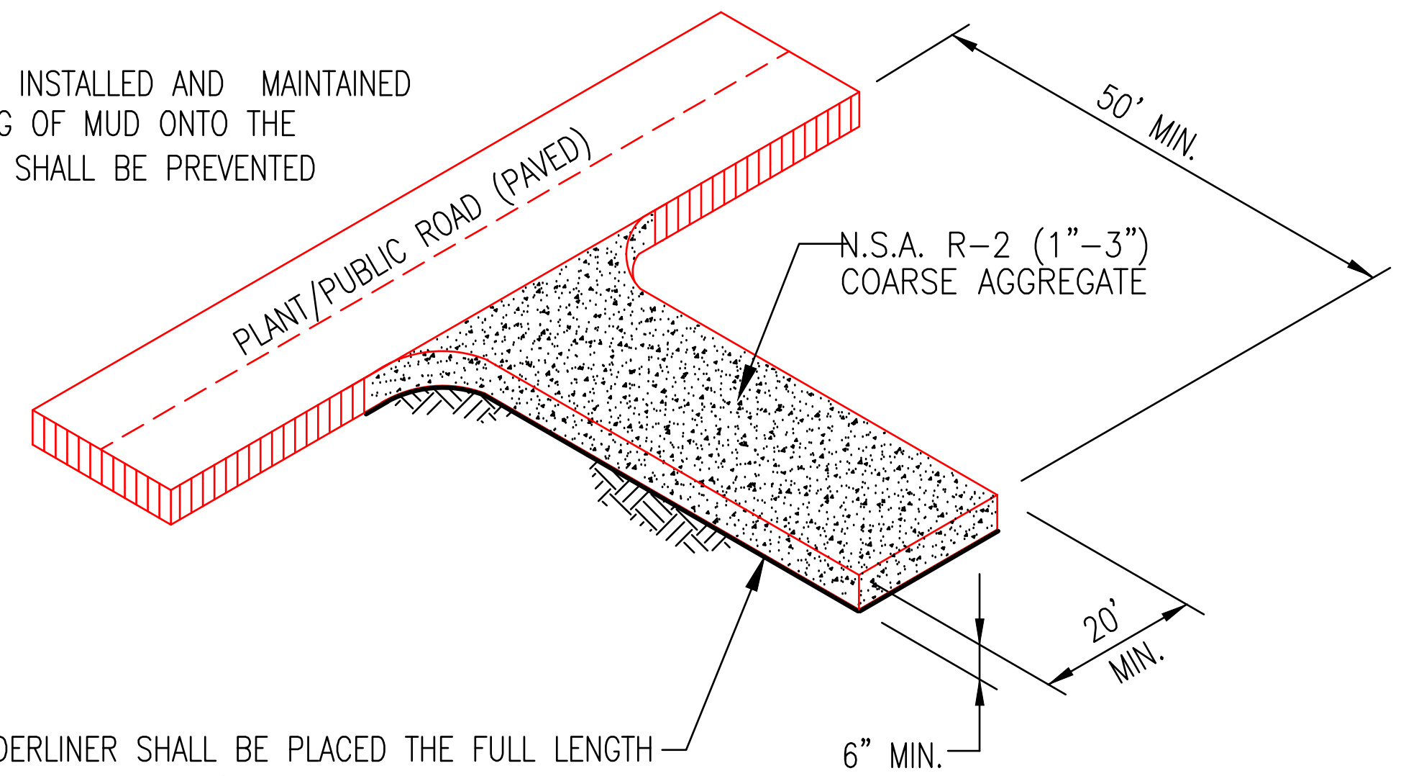
PLANT/PUBLIC ROAD (PAVED)
50' MIN.
N.S.A. R-2 (1"-3") COARSE AGGREGATE
20' MIN.
6" MIN.

GEOTEXTILE UNDERLINER SHALL BE PLACED THE FULL LENGTH AND WIDTH OF THE ENTRANCE/EXIT. GEOTEXTILE SHALL MEET REQUIREMENTS OF AASHTO M288-98:

1. FOR SUBGRADES WITH A CBR ≥3 OR SHEAR STRENGTH GREATER THAN 90 KPA, GEOTEXTILE MUST MEET REQUIREMENTS OF AASHTO M288-96 SECTION 7.3.
2. FOR SUBGRADES WITH A CBR BETWEEN 1 AND 3 OR SHEER STRENGTH BETWEEN 30 AND 90 KPA, GEOTEXTILE MUST MEET REQUIREMENTS OF AASHTO M288-96 SECTION 7.4.

GRAVEL CONSTRUCTION ENTRANCE/EXIT
N.T.S.
Co

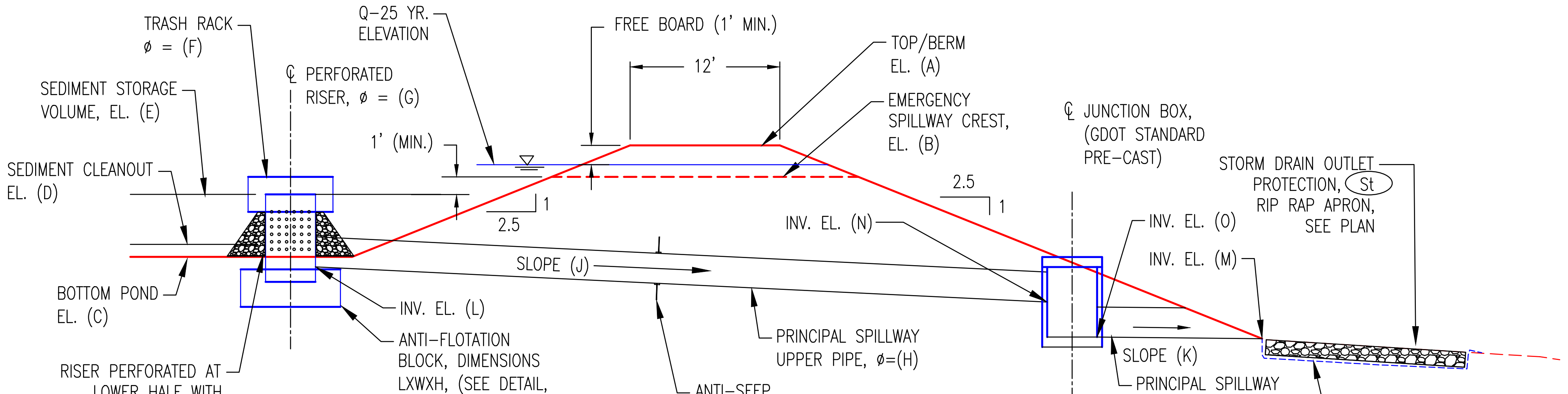
TRASH RACK ø = (F)
SEDIMENT STORAGE VOLUME, EL. (E)
SEDIMENT CLEANOUT EL. (D)
℄ PERFORATED RISER, ø = (G)
Q-25 YR. ELEVATION
1' (MIN.)
FREE BOARD (1' MIN.)
12'
TOP/BERM EL. (A)
EMERGENCY SPILLWAY CREST, EL. (B)
2.5
1
2.5
1
℄ JUNCTION BOX, (GDOT STANDARD PRE-CAST)
STORM DRAIN OUTLET PROTECTION, St RIP RAP APRON, SEE PLAN
INV. EL. (N)
INV. EL. (O)
INV. EL. (M)
SLOPE (J)
BOTTOM POND EL. (C)
INV. EL. (L)
ANTI-FLOTATION BLOCK, DIMENSIONS LXWXH, (SEE DETAIL, THIS DWG.)
ANTI-SEEP COLLAR, PROJECTION (I)
PRINCIPAL SPILLWAY UPPER PIPE, ø=(H)
SLOPE (K)
PRINCIPAL SPILLWAY LOWER PIPE, ø=(H)
GEOTEXTILE, MIRIFI FW403 OR APPROVED EQUAL
RISER PERFORATED AT LOWER HALF WITH 1/2 INCH HOLES SPACED APPROX. 3 INCHES APART. COVERED AROUND PERI-METER WITH TWO FOOT THICKNESS OF 3 TO 4 INCH STONE

TEMPORARY CONSTRUCTION SEDIMENT BASIN
RISER SECTION
Sd3
(POND #3 & SIMILAR FOR RETROFIT OF NORTH & SOUTH PROCESS SEDIMENTATION PONDS)
N.T.S.

TEMPORARY SEDIMENT BASIN SECTION DATA

	POND #1	POND #2	RETROFIT SOUTH SED. POND	RETROFIT NORTH SED. POND	POND #3
A	710.00	702.00	740.70	740.70	752.00
B	708.00	700.00	738.33	738.33	750.00
C	704.00	696.50	VARIES	VARIES	744.00
D	704.80	697.30	*SEE NOTE	*SEE NOTE	745.40
E	707.00	699.00	724.00	724.00	748.00
F	72"	72"	54"	54"	54"
G	48"	48"	36"	36"	36"
H	30"	30"	18"	18"	24"
I	18"	18"	24"	24"	24"
J	1.00%	0.50%	18.00%	13.50%	3.00%
K	N/A	N/A	0.50%	0.50%	0.50%
L	702.40	695.50	724.00	723.20	742.00
M	701.40	695.15	685.90	699.95	730.00
N	N/A	N/A	688.00	700.25	733.60
O	N/A	N/A	686.00	700.00	730.05

*NOTE: RETROFITTED SEDIMENTATION PONDS ARE SIZED FOR FLOW RATES FOR PROCESS CONDITIONS AND ARE LARGER THAN REQUIRED FOR BMP'S. SUGGEST CLEANOUT WHEN SEDIMENT DEPTH REACHES TWO FEET. PONDS AND PIPE APPURTENANCES SHALL BE THOROUGHLY CLEANED BEFORE CONVERTING TO USE AS PROCESS PONDS.

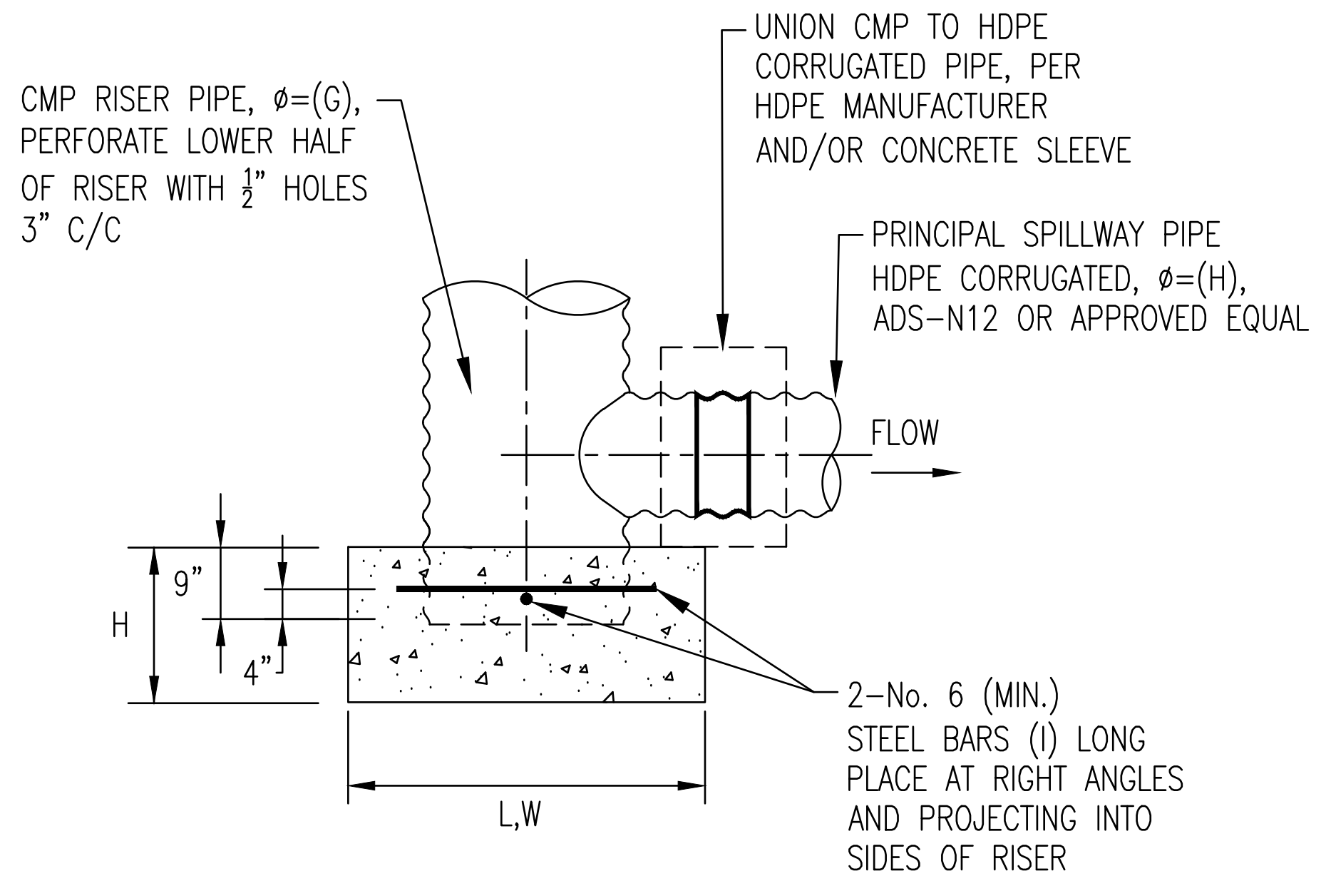
CMP RISER PIPE, ø=(G), PERFORATE LOWER HALF OF RISER WITH ½" HOLES 3" C/C
UNION CMP TO HDPE CORRUGATED PIPE, PER HDPE MANUFACTURER AND/OR CONCRETE SLEEVE
PRINCIPAL SPILLWAY PIPE HDPE CORRUGATED, ø=(H), ADS-N12 OR APPROVED EQUAL
FLOW
9"
H
4"
L,W
2-No. 6 (MIN.) STEEL BARS (I) LONG PLACE AT RIGHT ANGLES AND PROJECTING INTO SIDES OF RISER

CONCRETE RISER BASE DETAIL
NOT TO SCALE

REFERENCES:

H1C11120	TITLE SHEET AND DRAWING INDEX
H1C11125	CELL NO. 1, SITE DEVELOPMENT, BASE GRADING PLAN
H1C11127	SECURITY ROAD LAYOUT AND GRADING PLAN
H1C11126	CELL NO. 2, ROUGH SITE GRADING PLAN
H1C11130	CELL NO. 1, FINAL STACKING PLAN
H1C11131	CELL NO. 2, SITE DEVELOPMENT, BASE GRADING PLAN
H1C11132	CELL NO. 2, FINAL STACKING PLAN
H1C11133	CELL NO. 3, SITE DEVELOPMENT, BASE GRADING PLAN
H1C11134	CELL NO. 3, FINAL STACKING PLAN
H1C11145	CEL[illegible] 3 MISCELLANEOUS SECTIONS, SHEET 3

GEORGIA
DEPARTMENT OF NATURAL RESOURCES
ENVIRONMENTAL PROTECTION DIVISION
Approved
Solid Waste Management Program
Approved By: Keith Stevens Digitally signed by Keith Stevens Date: 2022.10.25

No. 27185 R. GRANT LANE 9/27/22
9/27/22

REVISION 0 DATE 09-23-2022
CCR LF PERMIT APPLICATION [BY HHNT, INC.]

BY	CHK'D	CIVIL APPR	ELECT APPR	I/C APPR	MECH APPR	DISC MGR
ANR	RBL					

Southern Company Generation
Engineering and Construction Services
FOR
Georgia Power Company

PLANT WANSLEY
COAL COMBUSTION BY-PRODUCT DISPOSAL FACILITY
CELL 1 THROUGH CELL 3
EROSION CONTROL SECTIONS & DETAILS
SHEET 2

SCALE	DRAWING NUMBER	SHEET	CONT'D	REV
AS NOTED	H1C11150	1	FINAL	0

Acad2004 ANSI F: 40x28

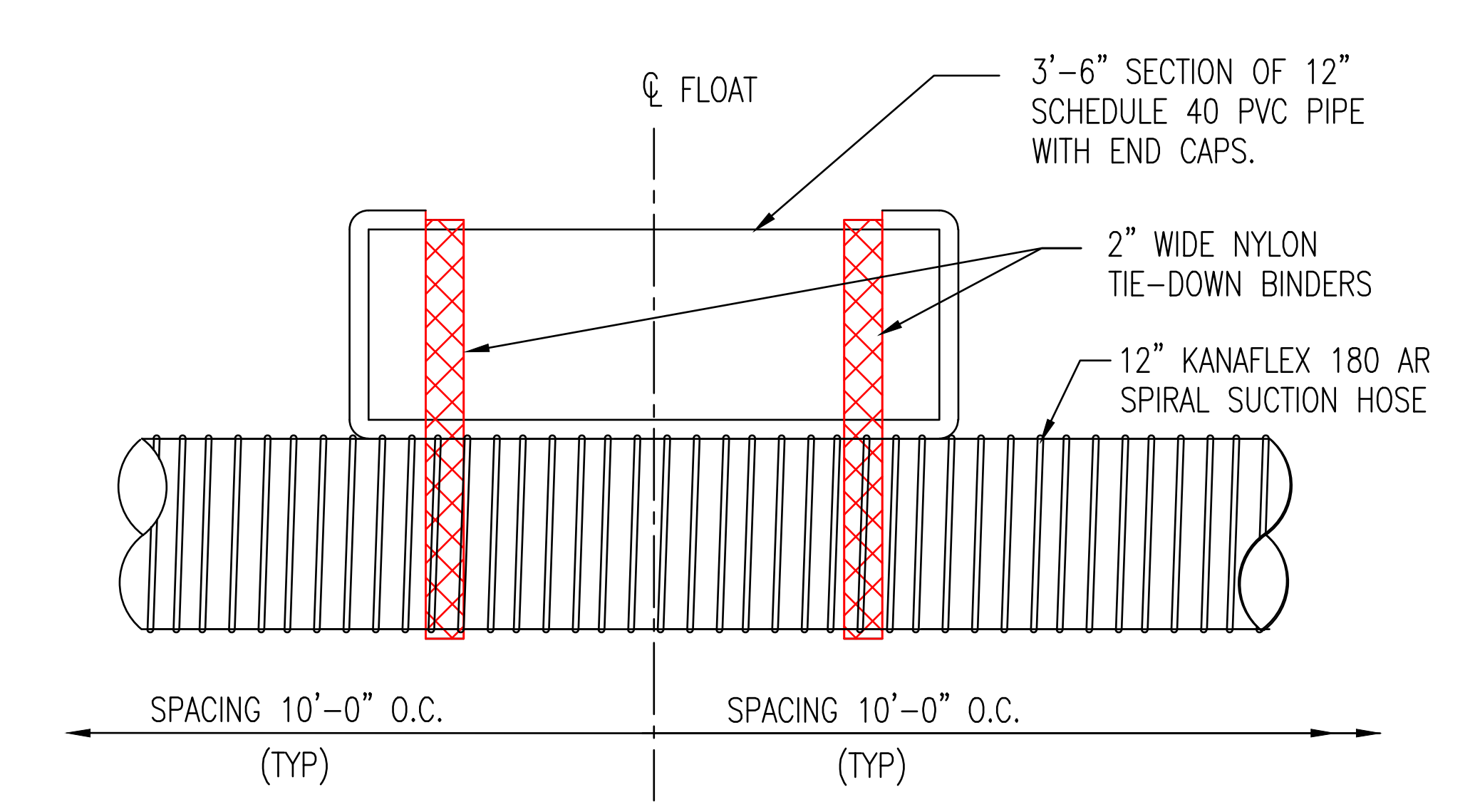
℄ FLOAT
3'-6" SECTION OF 12" SCHEDULE 40 PVC PIPE WITH END CAPS.
2" WIDE NYLON TIE-DOWN BINDERS
12" KANAFLEX 180 AR SPIRAL SUCTION HOSE
SPACING 10'-0" O.C. (TYP)
SPACING 10'-0" O.C. (TYP)

SUCTION HOSE FLOAT

N.T.S.

SIPHON WORK POINT TABLE

CELL NO.	COORDINATE WORK POINT	TOP OF CONCRETE ELEVATION
1	W.P. N 1237639.49 E 2029472.05	EL.= 736.50
2	W.P. N 1238520.40 E 2028299.32	EL.= 736.90
3	W.P. N 1238085.50 E 2026538.22	EL.= 755.00

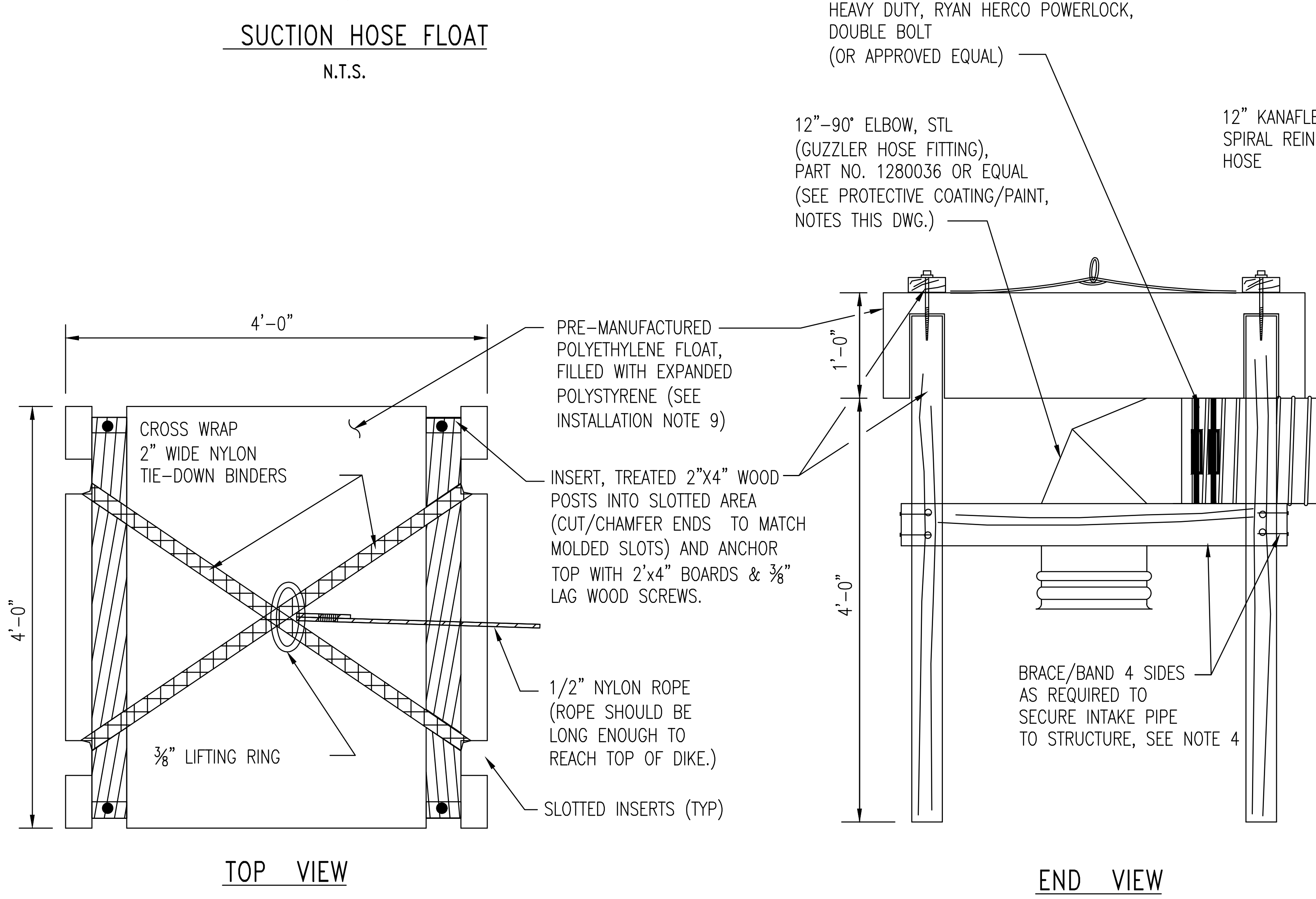
SPIRAL HOSE CLAMPS, HEAVY DUTY, RYAN HERCO POWERLOCK, DOUBLE BOLT (OR APPROVED EQUAL)
12"-90° ELBOW, STL (GUZZLER HOSE FITTING), PART NO. 1280036 OR EQUAL (SEE PROTECTIVE COATING/PAINT, NOTES THIS DWG.)
12" KANAFLEX 180 AR SPIRAL REINFORCED HOSE
4'-0"
PRE-MANUFACTURED POLYETHYLENE FLOAT, FILLED WITH EXPANDED POLYSTYRENE (SEE INSTALLATION NOTE 9)
CROSS WRAP 2" WIDE NYLON TIE-DOWN BINDERS
INSERT, TREATED 2"X4" WOOD POSTS INTO SLOTTED AREA (CUT/CHAMFER ENDS TO MATCH MOLDED SLOTS) AND ANCHOR TOP WITH 2'x4" BOARDS & ⅜" LAG WOOD SCREWS.
4'-0"
1/2" NYLON ROPE (ROPE SHOULD BE LONG ENOUGH TO REACH TOP OF DIKE.)
⅜" LIFTING RING
SLOTTED INSERTS (TYP)
1'-0"
4'-0"
BRACE/BAND 4 SIDES AS REQUIRED TO SECURE INTAKE PIPE TO STRUCTURE, SEE NOTE 4
TOP VIEW
END VIEW

POLYETHYLENE 4'X4'X1' FLOTATION INTAKE

N.T.S.

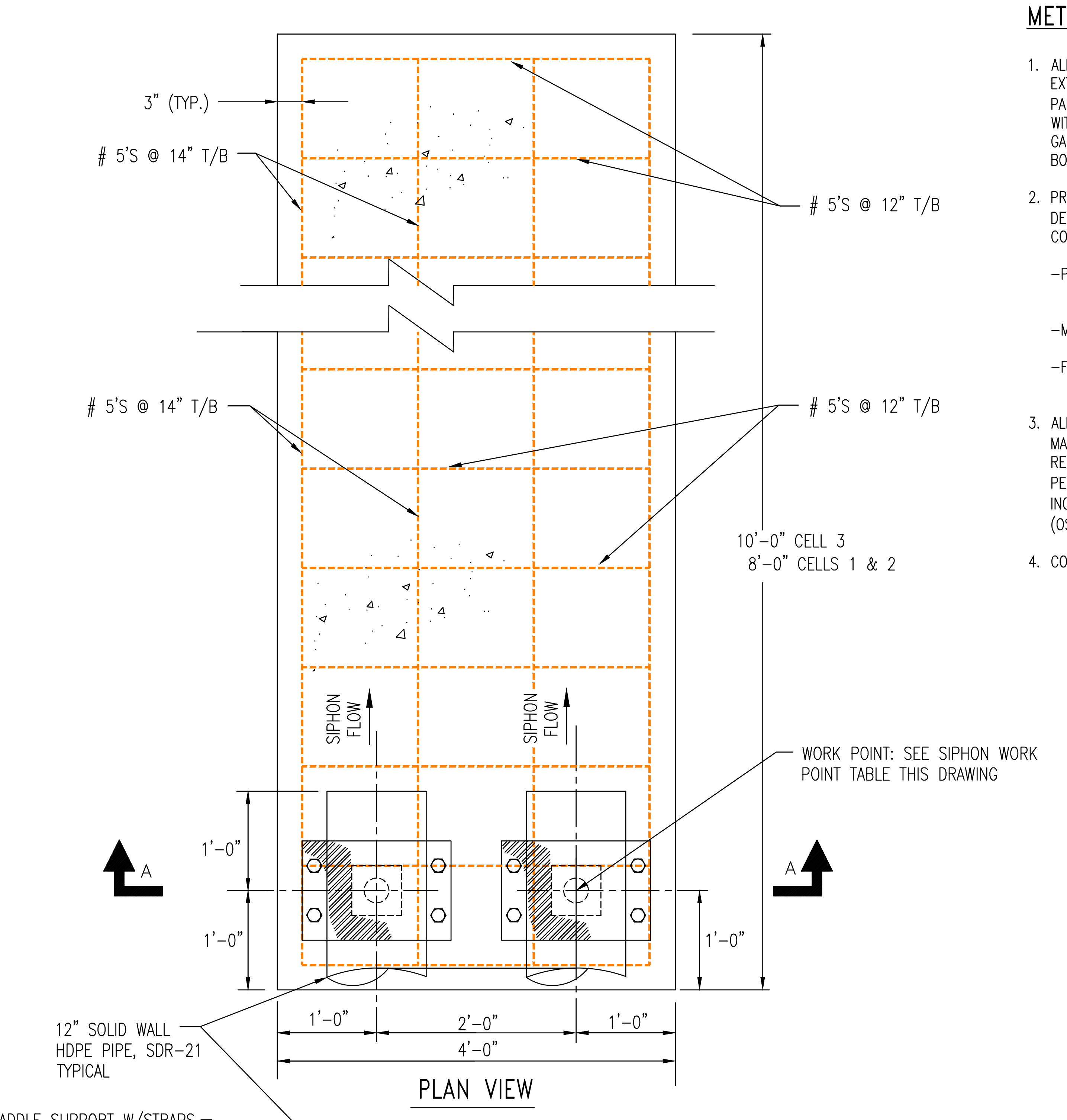
3" (TYP.)
# 5'S @ 14" T/B
# 5'S @ 12" T/B
# 5'S @ 14" T/B
# 5'S @ 12" T/B
10'-0" CELL 3
8'-0" CELLS 1 & 2
SIPHON FLOW
SIPHON FLOW
WORK POINT: SEE SIPHON WORK POINT TABLE THIS DRAWING
A
A
1'-0"
1'-0"
1'-0"
1'-0"
2'-0"
1'-0"
4'-0"
PLAN VIEW

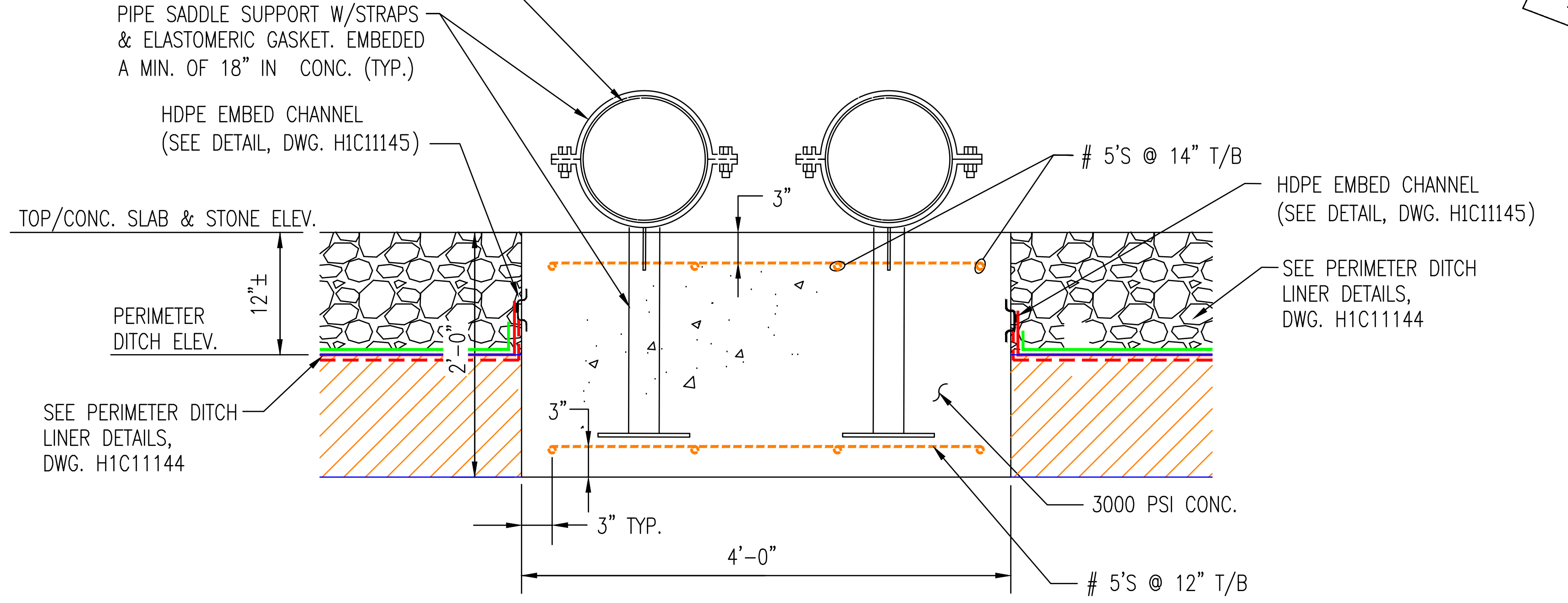
12" SOLID WALL HDPE PIPE, SDR-21 TYPICAL
PIPE SADDLE SUPPORT W/STRAPS & ELASTOMERIC GASKET. EMBEDED A MIN. OF 18" IN CONC. (TYP.)
HDPE EMBED CHANNEL (SEE DETAIL, DWG. H1C11145)
TOP/CONC. SLAB & STONE ELEV.
PERIMETER DITCH ELEV.
12"±
SEE PERIMETER DITCH LINER DETAILS, DWG. H1C11144
3"
3"
# 5'S @ 14" T/B
HDPE EMBED CHANNEL (SEE DETAIL, DWG. H1C11145)
SEE PERIMETER DITCH LINER DETAILS, DWG. H1C11144
3000 PSI CONC.
3" TYP.
4'-0"
# 5'S @ 12" T/B

SECTION "A-A"
DISCHARGE THRUST ANCHOR/SPLASH PAD
CELLS 1, 2 & 3

N.T.S.

METAL AND CONCRETE SURFACE COATINGS/PAINT:

1. ALL METAL SURFACES WHICH SHALL BE IN CONTACT WITH GYPSUM SLURRY OR DECANT OVER AN EXTENDED PERIOD OF TIME SHALL BE COATED BY THE MANUFACTURER WITH A CORROSION INHIBITIVE PAINT PROVEN EFFECTIVE AS A BARRIER TO THE GYPSUM PRODUCT (CALCIUM SULFATE DIHYDRATE) WITH THE EXCEPTION OF STAINLESS STEEL AND ALUMINUM WHICH DO NOT REQUIRE COATING. GALVANIZED STEEL SHOULD NOT BE SUBSTITUTED FOR MATERIAL SHOWN ON THE PLANS. GALVANIZED BOLTS, FITTINGS, ETC... WHERE INDICATED IN THE PLANS SHOULD NOT BE COATED.
2. PRODUCTS WITHOUT MANUFACTURER APPLIED PROTECTANT SHALL BE THOROUGHLY COATED AS DESCRIBED BELOW IN ACCORDANCE WITH SCS/GEORGIA POWER PAINT/COATING SPECIFICATIONS. PAINT COLOR SHALL BE AS DIRECTED BY GEORGIA POWER.

   -PRIME COAT: SHERWIN-WILLIAMS ZINC-CLAD II, ETHYL SILICATE, INORGANIC, ZINC-RICH COATING AT 2 TO 3 MILS DFT

   -MIDDLE COAT: SHERWIN-WILLIAMS MACROPOXY 646, EPOXY MASTIC AT 5 TO 7 MILS DFT

   -FINISH COAT: SHERWIN-WILLIAMS ACROLON 218 HS ACRYLIC POLYURETHANE, POLYURETHANE ENAMEL AT 2 MILS DFT
3. ALL SURFACES TO RECEIVE COATINGS SHALL BE THOROUGHLY PREPARED FOLLOWING MANUFACTURER'S GUIDELINES AND SCS/GEORGIA POWER SPECIFICATIONS. CONTRACTOR SHALL BE RESPONSIBLE FOR ADHERING TO ALL FEDERAL, STATE, AND LOCAL RULES AND REGULATIONS PERTAINING TO THE STORAGE/TRANSPORT AND APPLICATION OF PAINTS, COATINGS, SOLVENTS, ETC... INCLUDING THE DEPARTMENT OF LABOR'S OCCUPATIONAL SAFETY AND HEALTH ADMINISTRATION'S (OSHA'S) CURRENT REGULATIONS.
4. CONTRACTOR SHALL PROTECT VALVE STEMS AND OTHER SURFACES FROM OVERSPRAY.

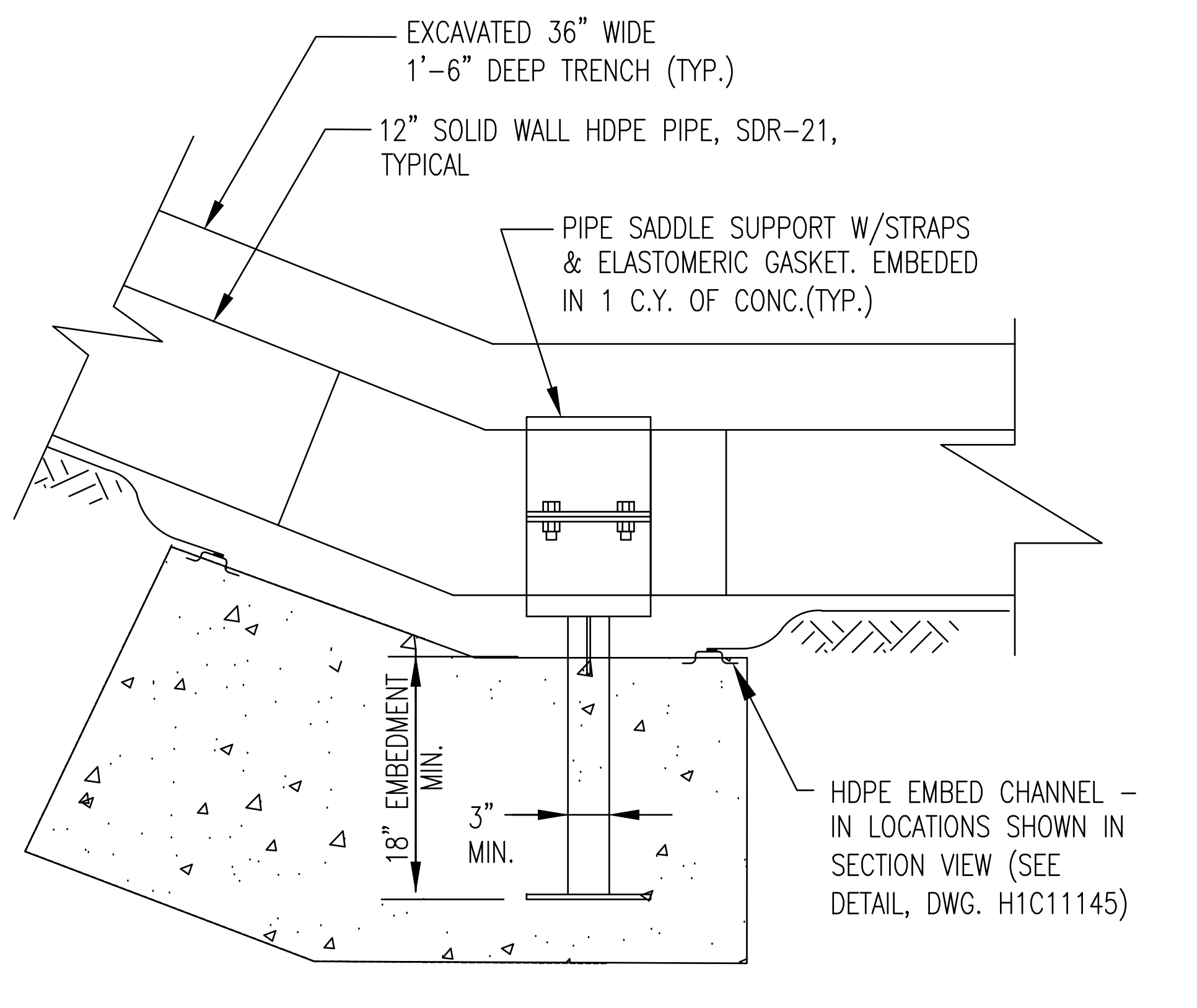
EXCAVATED 36" WIDE 1'-6" DEEP TRENCH (TYP.)
12" SOLID WALL HDPE PIPE, SDR-21, TYPICAL
PIPE SADDLE SUPPORT W/STRAPS & ELASTOMERIC GASKET. EMBEDED IN 1 C.Y. OF CONC.(TYP.)
18" EMBEDMENT MIN.
3" MIN.
HDPE EMBED CHANNEL - IN LOCATIONS SHOWN IN SECTION VIEW (SEE DETAIL, DWG. H1C11145)

SECTION
SIPHON THRUST ANCHOR

N.T.S.

ELEVATION TABLE
FOR PLACEMENT OF BALL VALVE

CELL NO.	MANUAL VALVE PLACEMENT ELEVATION
1	EL.= 744.50
2	EL.= 749.00
3	EL.= 763.20

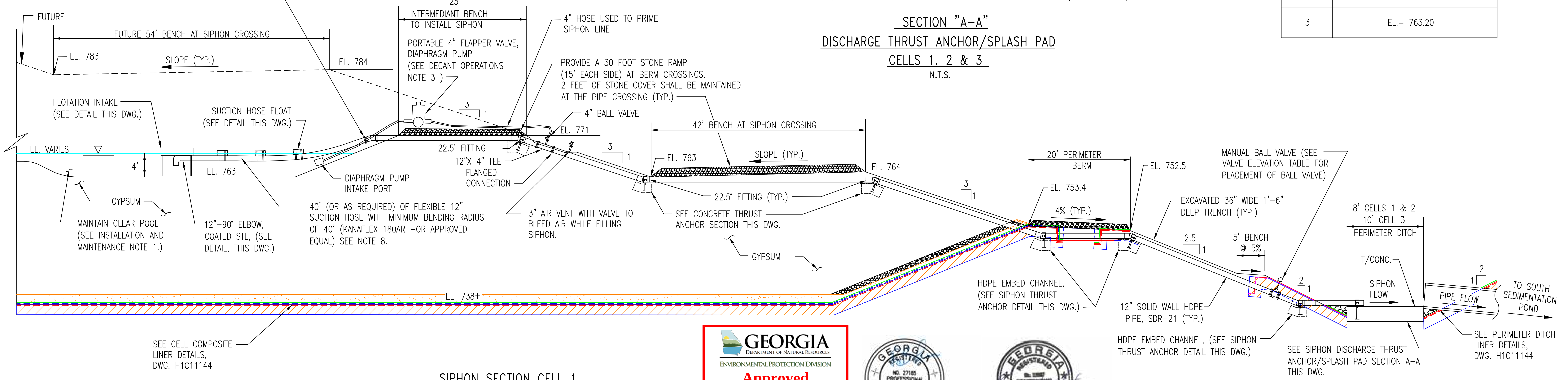
BOLTED FLANGE CONNECTION W/HDPE FLANGE & BACKUP RING, 150 LB STL WN FLANGE, WELD-ON MALE HOSE COUPLER (GUZZLER PART NO. 43370, OR EQUAL), SPIRAL HOSE CLAMPS, HEAVY DUTY, RYAN HERCO POWERLOCK, DBL. BOLT (OR EQUAL)
FUTURE
FUTURE 54' BENCH AT SIPHON CROSSING
EL. 783
SLOPE (TYP.)
EL. 784
25' INTERMEDIANT BENCH TO INSTALL SIPHON
PORTABLE 4" FLAPPER VALVE, DIAPHRAGM PUMP (SEE DECANT OPERATIONS NOTE 3)
4" HOSE USED TO PRIME SIPHON LINE
PROVIDE A 30 FOOT STONE RAMP (15' EACH SIDE) AT BERM CROSSINGS. 2 FEET OF STONE COVER SHALL BE MAINTAINED AT THE PIPE CROSSING (TYP.)
4" BALL VALVE
EL. 771
3
1
FLOTATION INTAKE (SEE DETAIL THIS DWG.)
SUCTION HOSE FLOAT (SEE DETAIL THIS DWG.)
EL. VARIES
4'
EL. 763
22.5° FITTING
12"X 4" TEE FLANGED CONNECTION
DIAPHRAGM PUMP INTAKE PORT
42' BENCH AT SIPHON CROSSING
EL. 763
SLOPE (TYP.)
EL. 764
3
1
22.5° FITTING (TYP.)
GYPSUM
MAINTAIN CLEAR POOL (SEE INSTALLATION AND MAINTENANCE NOTE 1.)
12"-90° ELBOW, COATED STL, (SEE DETAIL, THIS DWG.)
40' (OR AS REQUIRED) OF FLEXIBLE 12" SUCTION HOSE WITH MINIMUM BENDING RADIUS OF 40' (KANAFLEX 180AR -OR APPROVED EQUAL) SEE NOTE 8.
3" AIR VENT WITH VALVE TO BLEED AIR WHILE FILLING SIPHON.
SEE CONCRETE THRUST ANCHOR SECTION THIS DWG.
GYPSUM
EL. 738±
20' PERIMETER BERM
EL. 752.5
EL. 753.4
3
1
4% (TYP.)
MANUAL BALL VALVE (SEE VALVE ELEVATION TABLE FOR PLACEMENT OF BALL VALVE)
EXCAVATED 36" WIDE 1'-6" DEEP TRENCH (TYP.)
2.5
1
5' BENCH @ 5%
8' CELLS 1 & 2
10' CELL 3
PERIMETER DITCH
T/CONC.
SIPHON FLOW
2
1
2
1
PIPE FLOW
TO SOUTH SEDIMENTATION POND
HDPE EMBED CHANNEL, (SEE SIPHON THRUST ANCHOR DETAIL THIS DWG.)
12" SOLID WALL HDPE PIPE, SDR-21 (TYP.)
HDPE EMBED CHANNEL, (SEE SIPHON THRUST ANCHOR DETAIL THIS DWG.)
SEE SIPHON DISCHARGE THRUST ANCHOR/SPLASH PAD SECTION A-A THIS DWG.
SEE PERIMETER DITCH LINER DETAILS, DWG. H1C11144
SEE CELL COMPOSITE LINER DETAILS, DWG. H1C11144

SIPHON SECTION CELL 1

SCALE: 1" = 10'

SIPHON INSTALLATION AND OPERATION NOTES:

INSTALLATION AND MAINTENANCE:

1. MAINTAIN CLEAR POOL AREA AT SIPHON INTAKE OF SUFFICIENT DEPTH DURING DECANT OPERATIONS OF CELL. (5' SUGGESTED, 3' MINIMUM DEPTH – WILL LOSE SIPHON AT 2' DEPTH). AT LEAST 2' OF FREEBOARD MUST BE MAINTAINED AT ALL TIMES.
2. SECOND SIPHON SHOULD BE CAREFULLY MAINTAINED, TESTED, AND SHOULD BE IN POSITION FOR USE AS REQUIRED DURING STORM EVENTS. INTAKE POINT OF THIS SIPHON SHOULD BE POSITIONED 50 FEET OR MORE FROM THE PRIMARY INTAKE SIPHON.
3. FLAG/PROTECT VALVES AND APPURTENANCES OF SIPHON TO PREVENT DAMAGE FROM TRAFFIC AT TOP OF DIKES.
4. SIPHON MUST BE MAINTAINED AIRTIGHT TO PREVENT LOSS OF SUCTION DURING OPERATIONS. FLEX HOSE OR HDPE SOLID WALL PIPE MUST NOT BE PIERCED BY ANY SUPPORTING SCREWS OR BOLTS WHEN ASSEMBLING APPARATUS.
5. WATER SUPPLY INTO SIPHON MAY BE PUMPED FROM CELL OR PLANT WATER.
6. UPPER SECTION OF SIPHON AT TOP-OF-DIKE SHOULD BE BURIED WITH A MINIMUM OF 2 FEET OF COMPACTED COVER ABOVE PIPES. THE 2 FEET OF COVER, SHALL BE TAPERED DOWN TO BERM HEIGHT OVER A DISTANCE OF 15 FEET EACH SIDE OF PIPE TO ALLOW VEHICLE ACCESS ACROSS PIPES. THE UPPER FOOT OF COVER SHOULD BE CRUSHED AGGREGATE BASE MATERIAL.
7. TO REMOVE ANY ACCUMULATED HARDENED GYPSUM FROM INSIDE SURFACE OF PIPE, OPERATOR MAY PERIODICALLY USE HAND-HELD RUBBER HAMMER STRIKING OUTSIDE SURFACE OF MAIN SIPHON LINE. CARE SHOULD BE TAKEN TO PREVENT DAMAGE TO SIPHON VALVES/APPURTENANCES. MOTOR OPERATED EQUIPMENT SHOULD NOT BE USED TO STRIKE SIPHON.
8. SIPHON OPERATIONS WILL BE LIMITED DUE TO AVAILABLE HEIGHT DIFFERENTIAL BETWEEN INTAKE IN GYPSUM CELL AND DISCHARGE OUTLET END OF SIPHON. SIPHON WILL ONLY WORK AT DIKE ELEVATION HEIGHTS: CELL#1 EL. 771 AND ABOVE. THE SUCTION HOSE CAN NOT EXCEED 55' IN LENGTH AT CELL HEIGHT EL. 771'. AS THE CELL HEIGHT INCREASES, THE SUCTION HOSE LENGTH MAY BE INCREASED AS CALCULATED USING THE FOLLOWING EQUATION. (CELL HEIGHT ELEVATION – EL. 771') (3) + (55') = MAXIMUM SUCTION HOSE LENGTH. EX. AT A CELL HEIGHT EL. OF 784', THE MAXIMUM SUCTION HOSE LENGTH WOULD BE (EL. 784' – EL. 771') (3) + (55') = 94'.
9. A PRE-MANUFACTURED 4'X4'X12" POLYETHYLENE DOCK FLOAT SECTION WITH EXPANDED POLYSTYRENE FILL AS SHOWN IN DETAILS MAY BE ACQUIRED AT WWW.PROTATCH.COM OR AN APPROVED EQUAL MAY BE PROVIDED.
10. THE SIPHON PIPE RUNNING DOWN OUTER SLOPE OF STACKS SHOULD BE PLACED IN AN EXCAVATED TRENCH TO CONTROL MOVEMENT OF PIPE FROM EXPANSION/CONTRACTION OF HDPE AND THRUST OF SIPHON DURING OPERATIONS. THIS TRENCH SHOULD NOT BE BACKFILLED AS THERE WILL BE A NEED TO REMOVE GYPSUM DEPOSITS ACCUMULATING ALONG THE LENGTH OF THE PIPE (SEE NOTE 7 ABOVE). THE PIPE SHOULD NOT BE ENCASED IN THE CONCRETE THRUST BLOCKS BUT SHOULD BE SECURELY ATTACHED TO THE CONCRETE USING PIPE SADDLE SUPPORTS W/STRAPS AND ELASTOMERIC GASKET.
11. ALL METAL SURFACES OF THE SIPHON ASSEMBLY ARE TO BE COATED AS OUTLINED IN METAL SURFACE COATINGS/PAINT NOTES ON THIS DRAWING.
12. PRIOR TO PLACING FINAL SURFACE/CAP, THE SIPHON AND ALL APPURTENANCES (INCLUDING CONCRETE THRUST BLOCKS) SHALL BE REMOVED.

DECANT OPERATIONS:

1. SUBMERGE INTAKE OF PIPE BELOW POOL ELEVATION OF GYPSUM CELL. ALLOW FOR SUFFICIENT SUBMERGENCE TO PREVENT LOSS OF PRIME IN SIPHON IF AIR IS ALLOWED INTO INTAKE. A CLEAR POOL IN THE AREA OF THE INTAKE MUST BE MAINTAINED DURING COURSE OF CELL DECANTING.
2. CLOSE BALL VALVE AT PIPE DISCHARGE END. VALVE SHOULD BE A MANUAL BALL VALVE WHICH CAN BE OPERATED FROM THE TOP OF THE DIKE AREA TO FACILITATE SEQUENCE OF OPERATION/FILLING OF SIPHON.
3. OPEN AIR VENT VALVE AND OPEN WATER SUPPLY VALVE AT TOP OF SIPHON/DIKE AND FILL DISCHARGE PIPE FROM DOWNSTREAM BALL VALVE UNTIL WATER DISCHARGES FROM THE AIR VENT.
4. TURN OFF WATER SUPPLY WHEN DOWNSTREAM PIPE IS FILLED AND CLOSE AIR VENT VALVE.
5. OPEN DISCHARGE VALVE (BALL VALVE) TO START SIPHON.
6. REGULATE FLOW FROM CELL BY DISCHARGE VALVE.
7. FOR CONTINUOUS OPERATION, THE DISCHARGE VALVE WILL NEED TO BE CALIBRATED SUCH THAT THE OPERATOR WILL KNOW THE VALVE POSITION WHERE THE DISCHARGE EQUALS THAT OF THE SLURRY ENTERING THE STACK..I.E. THE PERMANENT POOL ELEVATION OF THE STACK IS CONSTANT. THIS VALVE MAY BE OPENED UP TO ALLOW FOR ADDITIONAL DISCHARGE FROM STORM EVENTS, HOWEVER A SECOND SIPHON WILL BE NEEDED FOR LARGER STORM FLOW DISCHARGE (SEE BELOW).

STORM FLOW DISCHARGE OPERATIONS:

1. MAINTAIN DECANT SIPHON FLOW WITH DISCHARGE VALVE OPEN FOR FULL FLOW.
2. PRIME SECOND SIPHON USING PROCEDURES ABOVE AND SET DISCHARGE VALVE OPEN TO FULL FLOW.
3. SHUT OFF SECOND SIPHON WHEN WATER LEVEL IN CELL RETURNS TO PROCESS ELEVATION. (CLOSE MANUAL BALL VALVE AT DISCHARGE OF SIPHON).

GEORGIA
DEPARTMENT OF NATURAL RESOURCES
ENVIRONMENTAL PROTECTION DIVISION
Approved
Solid Waste Management Program
Approved By: Keith Stevens
Digitally signed by Keith Stevens
Date: 2022.10.25 08:59:48 -04'00'

NO. 27185 PROFESSIONAL ENGINEER R. BRANT LANE
9/27/22

GARY H. McWHORTER
9/27/22

REVISION 0 DATE 09-23-2022
CCR LF PERMIT APPLICATION [BY HHNT, INC.]

BY	CHK'D	CIVIL APPR	ELECT APPR	I/C APPR	MECH APPR	DISC MGR
ANR	RBL					

Southern Company Generation
Engineering and Construction Services
FOR
Georgia Power Company

PLANT WANSLEY
COAL COMBUSTION BY-PRODUCT DISPOSAL FACILITY
CELL 1 THROUGH CELL 3
SIPHON SECTIONS AND DETAILS

SCALE	DRAWING NUMBER	SHEET	CONT'D	REV
AS NOTED	H1C11151	1	FINAL	0

Acad2004 ANSI F: 40x28

CELL 1 AND CELL 2

FLUME A			
POINT NO.	NORTHING	EASTING	ELEVATION
A1	1237682.66	2027978.61	904.15
A2	1237696.47	2027974.78	904.15
A3	1237678.66	2027908.07	883.00
A4	1237692.60	2027906.67	883.00
A5	1237671.67	2027784.99	882.00
A6	1237685.57	2027782.75	882.14
A7	1237656.75	2027729.59	863.00
A8	1237670.34	2027726.18	863.00
A9	1237619.74	2027592.10	843.00
A10	1237633.48	2027589.29	843.00
A11	1237586.39	2027468.24	843.00
A12	1237600.16	2027465.56	843.60
A13	1237578.73	2027405.52	823.00
A14	1237592.57	2027403.35	823.00
A15	1237549.47	2027165.58	823.30
A16	1237563.31	2027163.43	823.20
A17	1237537.81	2027104.17	803.00
A18	1237551.59	2027101.68	803.00
A19	1237507.31	2026943.45	803.80
A20	1237521.07	2026940.84	803.83
A21	1237507.96	2026909.77	803.98
A22	1237521.61	2026912.91	803.98
A23	1237516.76	2026871.60	792.00
A24	1237530.33	2026874.99	792.00
A25	OMIT	OMIT	OMIT
A26	OMIT	OMIT	OMIT

FLUME B			
POINT NO.	NORTHING	EASTING	ELEVATION
B1	1237783.38	2028160.95	904.15
B2	1237780.51	2028175.04	904.27
B3	1237853.81	2028158.95	883.00
B4	1237853.24	2028172.92	883.00
B5	1237945.35	2028156.26	863.00
B6	1237945.34	2028170.24	863.00
B7	1238040.51	2028153.51	843.00
B8	1238039.81	2028167.49	843.00
B9	1238135.80	2028158.29	823.00
B10	1238134.73	2028172.25	823.00
B11	1238232.03	2028168.25	803.00
B12	1238230.59	2028182.18	803.00
B13	1238331.17	2028178.52	783.00
B14	1238329.73	2028192.44	783.00
B15	1238433.85	2028195.75	763.00
B16	1238431.32	2028209.52	763.00
B17	1238464.86	2028200.95	762.00
B18	1238462.31	2028214.72	762.00
B19	OMIT	OMIT	OMIT
B20	OMIT	OMIT	OMIT
B21	OMIT	OMIT	OMIT
B22	OMIT	OMIT	OMIT

FLUME C			
POINT NO.	NORTHING	EASTING	ELEVATION
C1	1237682.86	2028501.34	904.15
C2	1237676.02	2028513.55	904.15
C3	1237743.03	2028534.73	883.00
C4	1237736.24	2028546.97	883.00
C5	1237782.59	2028556.68	883.85
C6	1237774.70	2028568.32	883.40
C7	1237831.38	2028596.47	863.00
C8	1237823.57	2028608.16	863.00
C9	1237915.32	2028641.71	843.00
C10	1237908.62	2028654.11	843.00
C11	1237939.94	2028654.98	844.00
C12	1237934.30	2028667.84	844.00
C13	1237998.76	2028675.34	823.00
C14	1237994.18	2028688.57	823.00
C15	1238081.99	2028704.15	803.00
C16	1238077.42	2028717.38	803.00
C17	1238165.19	2028732.95	783.00
C18	1238160.61	2028746.18	783.00
C19	1238205.75	2028746.99	778.00
C20	1238200.35	2028759.93	778.20

FLUME D			
POINT NO.	NORTHING	EASTING	ELEVATION
D1	1237350.55	202644.19	863.00
D2	1237341.39	2028636.42	863.00
D3	OMIT	OMIT	OMIT
D4	OMIT	OMIT	OMIT
D5	OMIT	OMIT	OMIT
D6	OMIT	OMIT	OMIT
D7	1237292.84	2028709.80	844.00
D8	1237282.08	2028701.57	844.00
D9	1237231.98	2028774.43	823.00
D10	1237222.82	2028766.66	823.00
D11	1237172.70	2028839.54	803.00
D12	1237163.52	2028831.80	803.00
D13	1237100.62	2028918.71	783.00
D14	1237091.58	2028910.81	783.00
D15	1237041.38	2028983.78	763.00
D16	1237032.30	2028975.92	763.00
D17	1237019.58	2029007.72	761.53
D18	1237010.74	2028999.61	761.64
D19	OMIT	OMIT	OMIT
D20	OMIT	OMIT	OMIT

FLUME E			
POINT NO.	NORTHING	EASTING	ELEVATION
E1	1237438.13	2028232.97	883.00
E2	1237445.41	2028223.43	883.00
E3	1237368.54	2028179.04	863.00
E4	1237375.82	2028169.50	863.00
E5	1237298.99	2028125.14	843.00
E6	1237306.26	2028115.59	843.00
E7	1237215.86	2028060.71	823.00
E8	1237223.12	2028051.16	823.00
E9	1237146.30	2028006.81	803.00
E10	1237153.56	2027997.25	803.00
E11	1237098.43	2027969.71	792.00
E12	1237105.80	2027960.24	792.00
E13	OMIT	OMIT	OMIT
E14	OMIT	OMIT	OMIT

FLUME F			
POINT NO.	NORTHING	EASTING	ELEVATION
F1	1237674.48	2027269.49	803.00
F2	1237678.91	2027280.52	803.00
F3	1237755.01	2027233.90	783.00
F4	1237759.49	2027245.04	783.00
F5	1237782.04	2027221.96	782.45
F6	1237786.70	2027233.02	782.45
F7	OMIT	OMIT	OMIT
F8	OMIT	OMIT	OMIT

FLUME G			
POINT NO.	NORTHING	EASTING	ELEVATION
G1	1237865.39	2027727.84	843.00
G2	1237872.30	2027737.70	843.00
G3	1237935.90	2027668.96	823.00
G4	1237942.96	2027678.70	823.00
G5	1238006.21	2027610.25	803.00
G6	1238013.49	2027619.80	803.00
G7	1238076.84	2027551.27	783.00
G8	1238084.24	2027560.72	783.00
G9	1238132.58	2027504.71	768.50
G10	1238140.12	2027514.06	768.50
G11	OMIT	OMIT	OMIT
G12	OMIT	OMIT	OMIT
G13	OMIT	OMIT	OMIT
G14	OMIT	OMIT	OMIT

FLUME H			
POINT NO.	NORTHING	EASTING	ELEVATION
H1	1238136.62	2027915.51	803.00
H2	1238141.19	2027926.61	803.00
H3	1238217.99	2027881.97	783.00
H4	1238222.54	2027893.07	783.00
H5	1238299.34	2027848.44	763.00
H6	1238303.90	2027859.54	763.00
H7	1238322.05	2027839.08	764.00
H8	1238326.42	2027850.25	764.00
H9	OMIT	OMIT	OMIT
H10	OMIT	OMIT	OMIT

FLUME J			
POINT NO.	NORTHING	EASTING	ELEVATION
J1	1238060.33	2028435.60	823.00
J2	1238057.35	2028447.22	823.00
J3	1238145.57	2028457.48	803.00
J4	1238142.59	2028469.10	803.00
J5	1238230.81	2028479.35	783.00
J6	1238227.83	2028490.98	783.00
J7	1238296.47	2028496.21	769.70
J8	1238291.96	2028507.44	770.25
J9	1238301.82	2028499.22	767.75
J10	1238295.74	2028509.57	768.85
J11	OMIT	OMIT	OMIT
J12	OMIT	OMIT	OMIT

FLUME K			
POINT NO.	NORTHING	EASTING	ELEVATION
K1	1237758.12	2028746.37	843.00
K2	1237748.71	2028751.99	843.00
K3	1237810.91	2028818.59	823.00
K4	1237800.22	2028824.27	823.00
K5	1237862.09	2028890.40	803.00
K6	1237851.55	2028896.29	803.00
K7	1237913.93	2028963.15	783.00
K8	1237903.24	2028968.83	783.00
K9	1237950.33	2029014.23	771.59
K10	1237941.21	2029022.11	770.71
K11	OMIT	OMIT	OMIT
K12	OMIT	OMIT	OMIT
K13	OMIT	OMIT	OMIT
K14	OMIT	OMIT	OMIT

FLUME L			
POINT NO.	NORTHING	EASTING	ELEVATION
L1	1237618.50	2029090.04	803.00
L2	1237609.61	2029098.15	803.00
L3	1237673.15	2029159.30	783.00
L4	1237664.27	2029167.42	783.00
L5	1237727.81	2029228.56	763.00
L6	1237718.92	2029236.68	763.00
L7	1237744.52	2029249.75	763.35
L8	1237735.88	2029258.17	763.22
L9	OMIT	OMIT	OMIT
L10	OMIT	OMIT	OMIT

FLUME M			
POINT NO.	NORTHING	EASTING	ELEVATION
M1	1237515.35	2029010.91	823.00
M2	1237502.99	2029006.90	823.00
M3	1237440.34	2029098.42	803.00
M4	1237431.30	2029090.52	803.00
M5	1237383.06	2029165.22	783.00
M6	1237374.02	2029157.33	783.00
M7	1237325.78	2029232.04	763.00
M8	1237316.74	2029224.14	763.00
M9	1237303.07	2029258.53	760.70
M10	1237294.08	2029250.57	760.70
M11	OMIT	OMIT	OMIT
M12	OMIT	OMIT	OMIT

FLUME N			
POINT NO.	NORTHING	EASTING	ELEVATION
N1	1236834.51	2028691.00	783.00
N2	1236825.52	2028683.05	783.00
N3	1236786.96	2028744.72	768.42
N4	1236778.10	2028736.62	768.51
N5	OMIT	OMIT	OMIT
N6	OMIT	OMIT	OMIT
N7	OMIT	OMIT	OMIT
N8	OMIT	OMIT	OMIT

FLUME P			
POINT NO.	NORTHING	EASTING	ELEVATION
P1	1237374.99	2028435.92	904.15
P2	1237373.40	2028422.04	904.15
P3	1237018.77	2028469.26	844.00
P4	1237016.37	2028455.39	844.00
P5	1236910.00	2028476.76	823.00
P6	1236908.16	2028462.86	823.00
P7	1236771.70	2028486.30	803.00
P8	1236771.84	2028472.26	803.00
P9	1236739.48	2028488.52	804.30
P10	1236736.81	2028474.68	804.39
P11	1236655.93	2028515.52	783.00
P12	1236653.97	2028501.45	783.00
P13	1236564.70	2028545.01	768.00
P14	1236562.82	2028530.90	768.70
P15	1237306.39	2028443.80	883.00
P16	1237304.80	2028429.92	883.00
P17	1237183.95	2028457.87	863.00
P18	1237183.19	2028443.89	863.00
P19	1237034.75	2028472.38	843.00
P20	1237034.87	2028454.12	843.00

FLUME Q			
POINT NO.	NORTHING	EASTING	ELEVATION
Q1	1236932.04	2028263.41	803.00
Q2	1236939.95	2028254.39	803.00
Q3	1236867.12	2028194.95	783.00
Q4	1236875.04	2028194.95	783.00
Q5	1236843.07	2028181.95	781.47
Q6	1236851.90	2028173.76	781.88
Q7	OMIT	OMIT	OMIT
Q8	OMIT	OMIT	OMIT

FLUME R			
POINT NO.	NORTHING	EASTING	ELEVATION
R1	1237557.09	2027656.32	843.00
R2	1237560.90	2027644.94	843.00
R3	1237474.23	2027626.23	823.00
R4	1237478.33	2027614.95	823.00
R5	1237375.42	2027590.34	803.00
R6	1237379.52	2027579.06	803.00
R7	1237322.68	2027571.18	793.90
R8	1237327.50	2027560.17	793.90

FLUME S			
POINT NO.	NORTHING	EASTING	ELEVATION
S1	1237486.00	2027160.26	803.00
S2	1237489.38	2027148.45	803.00
S3	1237421.73	2027156.18	796.65
S4	1237422.22	2027144.22	796.69
S5	OMIT	OMIT	OMIT
S6	OMIT	OMIT	OMIT

BENCH			
POINT NO.	NORTHING	EASTING	ELEVATION
HP1	1237795.40	2028010.99	883.79
HP2	1237808.67	2028354.33	883.91
HP3	1237802.50	2028378.35	883.74
HP4	1237497.14	2028630.17	884.00
HP5	1237361.54	2028327.32	883.61
HP6	1237557.76	2028058.27	884.00
HP7	1237846.39	2027903.42	864.00
HP8	1237895.82	2028368.62	863.92
HP9	1237889.65	2028392.67	863.97
HP10	1237585.35	2028761.49	864.00
HP11	1237203.86	2028519.21	863.91
HP12	1237264.40	2028306.37	863.82
HP13	1237519.86	2027948.28	864.00
HP14	1237754.63	2027646.42	843.69
HP15	1237961.50	2027952.32	844.00
HP16	1237983.00	2028382.93	844.00
HP17	1237976.82	2028407.00	844.00
HP18	1237837.56	2028704.79	843.44
HP19	1237511.00	2028891.60	844.00
HP20	1237151.81	2028591.04	843.85
HP21	1237149.80	2028279.58	844.00
HP22	1237448.59	2027895.25	844.00
HP23	1237584.28	2027611.80	843.20
HP24	1237756.84	2027540.38	824.00
HP25	1238042.37	2027917.49	824.00
HP26	1238092.47	2028310.39	823.68
HP27	1238086.02	2028335.54	823.66
HP28	1238028.05	2028561.28	823.59
HP29	1237912.30	2028764.70	823.57
HP30	1237551.88	2029012.27	824.00
HP31	1237527.22	2029013.01	823.18
HP32	1237294.71	2028829.11	824.00
HP33	1237065.65	2028633.39	824.00
HP34	1237032.46	2028282.40	824.00
HP35	1237430.00	2027691.80	824.00
HP36	1237515.12	2027499.68	823.61
HP37	1237632.61	2027165.28	803.56
HP38	1237812.93	2027472.45	804.00
HP39	1238075.89	2027767.22	803.80
HP40	1238190.33	2028046.47	803.65
HP41	1238182.14	2028315.01	803.69
HP42	1238175.81	2028339.68	803.67
HP43	1238112.42	2028586.66	803.61
HP44	1237987.72	2028824.02	803.71
HP45	1237729.95	2028988.30	803.76
HP46	1237554.19	2029138.45	803.40
HP47	1237529.60	2029143.09	803.59
HP48	1237198.24	2028887.10	804.00
HP49	1236964.24	2028662.77	804.00
HP50	1236845.68	2028361.78	803.66
HP51	1237024.22	2028155.42	803.65
HP52	1237279.43	2027801.94	804.00
HP53	1237464.44	2027206.79	804.00
HP54	1237508.33	2027120.59	803.17
HP55	1237892.74	2027420.96	784.00
HP56	1238152.01	2027720.91	783.87
HP57	1238280.67	2028034.81	783.78
HP58	1238271.81	2028319.62	783.67
HP59	1238265.47	2028344.29	783.68
HP60	1238196.75	2028612.03	783.62
HP61	1238061.25	2028880.33	783.85
HP62	1238196.76	2028612.03	783.62
HP63	1237556.34	2029256.12	783.77
HP64	1237531.76	2029261.00	783.94
HP65	1237237.73	2029038.38	783.90
HP66	1236965.43	2028802.02	783.83
HP67	1236731.47	2028603.62	783.64
HP68	1236744.35	2028343.83	783.93
HP69	1236957.39	2028098.15	783.63
HP70	1238228.10	2027674.73	763.94
HP71	1238372.47	2028026.76	763.91
HP72	1238357.23	2028340.76	763.75
HP73	1238351.02	2028364.97	764.00
HP74	1237558.49	2029373.78	764.00
HP75	1237533.91	2029378.90	764.00
HP76	1237179.46	2029104.33	763.91
HP77	1236906.15	2028867.13	763.83
HP78	1236651.86	2028651.50	763.78
HP79	1237206.71	2028498.51	863.23
HP80	1237452.44	2027682.45	823.30
HP81	1237483.03	2027190.06	803.15

CELL 3

FLUME A			
POINT NO.	NORTHING	EASTING	ELEVATION
A1	1238239.13	2025770.08	870.20
A2	1238251.01	2025772.49	870.20
A3	1238245.17	2025668.51	863.24
A4	1238256.82	2025673.73	863.49
A5	1238279.14	2025633.44	859.00
A6	1238282.14	2025647.59	859.00
A7	1238366.73	2025543.02	839.00
A8	1238370.38	2025556.50	839.00

FLUME B			
POINT NO.	NORTHING	EASTING	ELEVATION
B1	1238306.67	2025846.18	859.00
B2	1238306.57	2025858.30	859.00
B3	1238390.99	2025835.47	839.00
B4	1238394.96	2025847.06	839.00
B5	1238481.27	2025824.00	819.00
B6	1238482.74	2025835.91	819.00

FLUME C			
POINT NO.	NORTHING	EASTING	ELEVATION
C1	1238265.61	2025953.97	870.20
C2	1238265.17	2025968.34	870.20
C3	1238302.86	2025979.25	859.00
C4	1238302.14	2025993.27	859.00
C5	1238389.10	2026037.81	839.00
C6	1238388.59	2026051.96	839.00
C7	1238469.35	2026092.29	823.85
C8	1238460.65	2026100.90	826.60
C9	1238485.06	2026115.86	819.00
C10	1238478.63	2026128.34	819.00
C11	1238526.14	2026177.76	810.50
C12	1238515.37	2026183.27	809.50
C13	1238537.49	2026210.67	799.00
C14	1238525.72	2026213.31	799.00

FLUME D			
POINT NO.	NORTHING	EASTING	ELEVATION
D1	1238153.50	2026066.12	859.00
D2	1238142.34	2026070.51	859.00
D3	1238186.36	2026147.76	839.00
D4	1238175.20	2026152.15	839.00
D5	1238229.39	2026219.22	819.00
D6	1238208.05	2026233.79	819.00
D7	1238252.08	2026311.03	799.00
D8	1238240.91	2026315.42	799.00

FLUME E			
POINT NO.	NORTHING	EASTING	ELEVATION
E1	1238028.35	2026178.67	839.00
E2	1238016.54	2026176.59	839.00
E3	1238013.16	2026265.34	819.00
E4	1238001.34	2026263.27	819.00
E5	1237997.96	2026352.02	799.00
E6	1237986.14	2026349.95	799.00

FLUME F			
POINT NO.	NORTHING	EASTING	ELEVATION
F1	1238037.93	2026047.47	870.20
F2	1238033.49	2026036.29	870.20
F3	1237987.63	2026063.89	859.00
F4	1237988.26	2026050.64	859.00
F5	1237868.55	2026130.93	839.00
F6	1237870.60	2026115.91	839.00
F7	1237774.66	2026183.78	827.37
F8	1237766.91	2026174.19	825.26
F9	1237749.36	2026216.37	819.00
F10	1237741.15	2026207.37	819.00
F11	1237708.16	2026269.44	809.42
F12	1237696.86	2026264.43	810.41
F13	1237702.75	2026300.23	799.00
F14	1237690.93	2026298.15	799.00

FLUME G			
POINT NO.	NORTHING	EASTING	ELEVATION
G1	1238064.47	2025922.25	859.00
G2	1238073.25	2025913.34	859.00
G3	1237984.33	2025879.29	839.00
G4	1237989.95	2025868.68	839.00
G5	1237889.20	2025828.29	819.00
G6	1237894.83	2025817.69	819.00

FLUME H			
POINT NO.	NORTHING	EASTING	ELEVATION
H1	1238220.46	2025651.75	859.00
H2	1238225.21	2025639.81	859.00
H3	1238124.36	2025563.33	839.00
H4	1238124.70	2025546.99	839.00

FLUME J			
POINT NO.	NORTHING	EASTING	ELEVATION
J1	OMIT	OMIT	OMIT
J2	OMIT	OMIT	OMIT
J3	OMIT	OMIT	OMIT
J4	OMIT	OMIT	OMIT
J5	OMIT	OMIT	OMIT
J6	OMIT	OMIT	OMIT
J7	OMIT	OMIT	OMIT
J8	OMIT	OMIT	OMIT

FLUME K			
POINT NO.	NORTHING	EASTING	ELEVATION
K1	OMIT	OMIT	OMIT
K2	OMIT	OMIT	OMIT
K3	OMIT	OMIT	OMIT
K4	OMIT	OMIT	OMIT

BENCH			
POINT NO.	NORTHING	EASTING	ELEVATION
HP1	1238264.42	2025862.76	869.63
HP2	1238161.81	2026017.72	869.79
HP3	OMIT	OMIT	OMIT
HP4	1238181.03	2025736.12	859.67
HP5	1238250.93	2025617.01	859.18
HP6	OMIT	OMIT	OMIT
HP7	1238294.40	2025746.89	859.50
HP8	1238304.71	2025918.77	859.30
HP9	1238233.26	2026034.74	859.43
HP10	1238074.00	2026096.27	859.44
HP11	OMIT	OMIT	OMIT
HP12	1238017.25	2025982.58	859.38
HP13	1237914.14	2025991.05	839.67
HP14	1238113.18	2025616.87	839.91
HP15	1238007.73	2025599.71	819.79
HP16	1238243.74	2025519.76	839.64
HP17	1238374.90	2025680.72	839.79
HP18	1238392.03	2025942.44	839.48
HP19	1238293.34	2026105.68	839.57
HP20	1238083.17	2026187.22	839.43
HP21	OMIT	OMIT	OMIT
HP22	1237937.28	2026162.69	839.40
HP23	1238456.41	2025622.78	820.00
HP24	1238479.03	2025976.13	819.70
HP25	1238349.84	2026178.01	819.70
HP26	1238091.58	2026278.23	819.56
HP27	OMIT	OMIT	OMIT
HP28	1237875.24	2026241.15	819.64
HP29	1237814.28	2026018.32	820.00
HP30	1238565.42	2026029.89	800.00
HP31	1238387.66	2026257.70	799.74
HP32	1238100.92	2026369.42	799.69
HP33	OMIT	OMIT	OMIT
HP34	1237844.48	2026325.09	799.73
HP35	1237722.61	2026017.96	800.00

GEORGIA
DEPARTMENT OF NATURAL RESOURCES
ENVIRONMENTAL PROTECTION DIVISION
Approved
Solid Waste Management Program
Approved By: Keith Stevens Digitally signed by Keith Stevens Date: 2022.10.25 08:59:48 -04'00'

NO. 27185 R. BRANT LANE 9/27/22

GARY H. McWHORTER 9/27/22

Southern Company Generation
Engineering and Construction Services
FOR

Georgia Power Company

PLANT WANSLEY
COAL COMBUSTION BY-PRODUCT DISPOSAL FACILITY
CELL NO.1 THROUGH CELL 3
FLUME DATA SHEET

REVISION 0 DATE 09-23-2022
CCR LF PERMIT APPLICATION [BY HHNT, INC.]

BY	CHK'D	CIVIL APPR	ELECT APPR	I/C APPR	MECH APPR	DISC MGR
ANR	RBL					

SCALE	DRAWING NUMBER	SHEET	CONT'D	REV
1"=100'	H1C11152	1	FINAL	0

Acad2008 ANSI F: 40x28

target ZERO Every day, every job, safely.

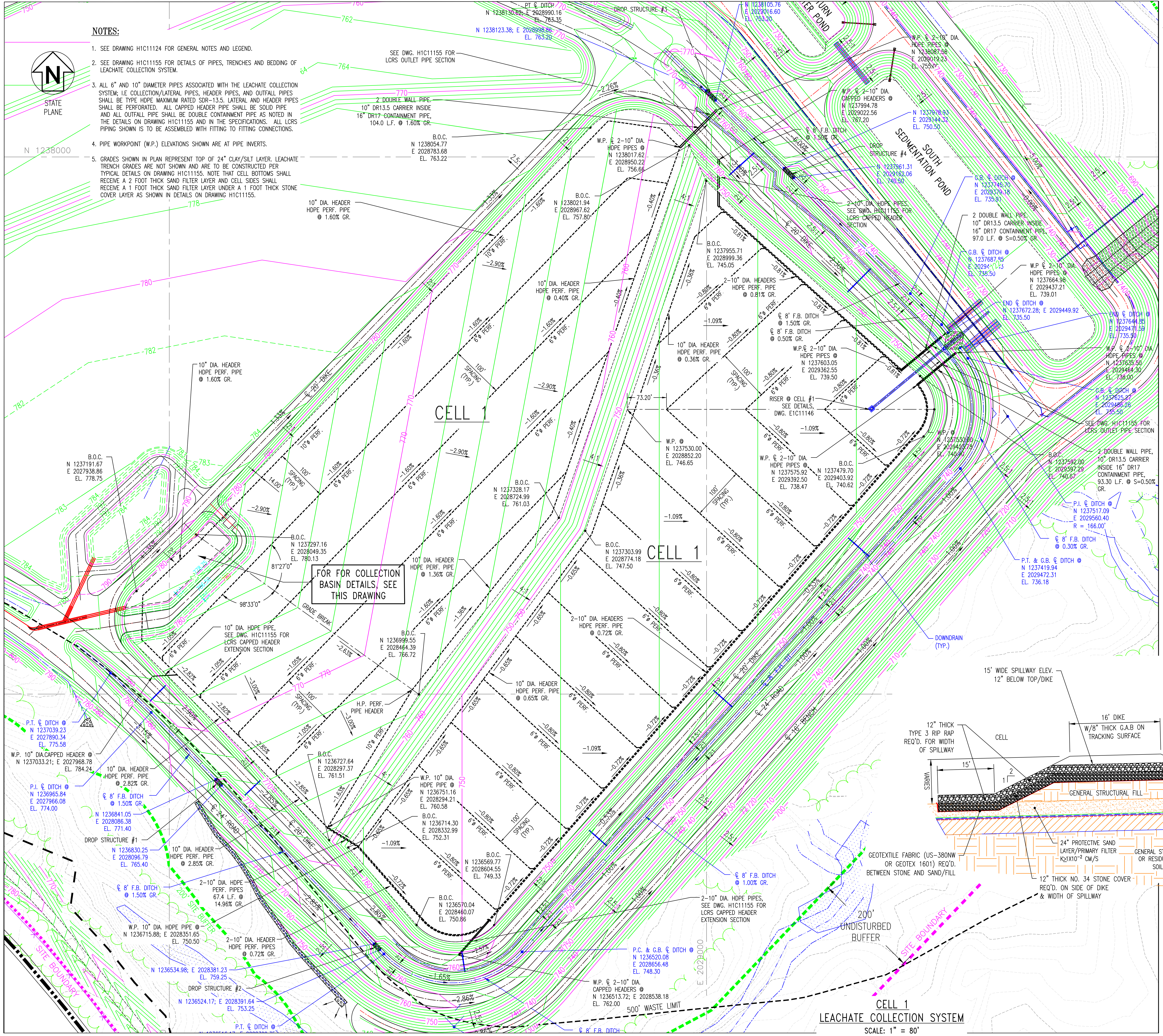
STATE PLANE
N 1238000
E 2029000
CELL 1
CELL 1
SOUTH SEDIMENTATION POND
FOR FOR COLLECTION BASIN DETAILS, SEE THIS DRAWING
SEE DWG. H1C11155 FOR LCRS OUTLET PIPE SECTION
2 DOUBLE WALL PIPE, 10" DR13.5 CARRIER INSIDE 16" DR17 CONTAINMENT PIPE, 104.0 L.F. @ 1.60% GR.
2 DOUBLE WALL PIPE, 10" DR13.5 CARRIER INSIDE 16" DR17 CONTAINMENT PIPE, 97.0 L.F. @ S=0.50% GR.
2 DOUBLE WALL PIPE, 10" DR13.5 CARRIER INSIDE 16" DR17 CONTAINMENT PIPE, 93.30 L.F. @ S=0.50% GR.
10" DIA. HEADER HDPE PERF. PIPE @ 1.60% GR.
10" DIA. HEADER HDPE PERF. PIPE @ 0.40% GR.
10" DIA. HEADER HDPE PERF. PIPE @ 0.36% GR.
10" DIA. HEADER HDPE PERF. PIPE @ 1.36% GR.
10" DIA. HEADER HDPE PERF. PIPE @ 0.65% GR.
10" DIA. HEADER HDPE PERF. PIPE @ 2.82% GR.
10" DIA. HEADER HDPE PERF. PIPE @ 2.85% GR.
2-10" DIA. HEADERS HDPE PERF. PIPE @ 0.81% GR.
2-10" DIA. HEADERS HDPE PERF. PIPE @ 0.72% GR.
2-10" DIA. HDPE PIPES SEE DWG. H1C11155 FOR LCRS CAPPED HEADER SECTION
10" DIA. HDPE PIPE, SEE DWG. H1C11155 FOR LCRS CAPPED HEADER EXTENSION SECTION
2-10" DIA. HDPE PIPES, SEE DWG. H1C11155 FOR LCRS CAPPED HEADER EXTENSION SECTION
RISER @ CELL #1 SEE DETAILS, DWG. E1C11146
DROP STRUCTURE #1
DROP STRUCTURE #2
DROP STRUCTURE #3
DROP STRUCTURE #4
6" Ø PERF.
100' SPACING (TYP.)
H.P. PERF. PIPE HEADER
GRADE BREAK
20' DIKE
24' ROAD
16' BENCH
DOWNDRAIN (TYP.)
200' UNDISTURBED BUFFER
500' WASTE LIMIT
SITE BOUNDARY
B.O.C. N 1238054.77 E 2028783.68 EL. 763.22
B.O.C. N 1238021.94 E 2028967.62 EL. 757.80
B.O.C. N 1237955.71 E 2028999.36 EL. 745.05
B.O.C. N 1237328.17 E 2028724.99 EL. 761.03
B.O.C. N 1237297.16 E 2028049.35 EL. 780.13
B.O.C. N 1237191.67 E 2027938.86 EL. 778.75
B.O.C. N 1236999.55 E 2028464.39 EL. 766.72
B.O.C. N 1237303.99 E 2028774.18 EL. 747.50
B.O.C. N 1236727.64 E 2028297.37 EL. 761.51
B.O.C. N 1236714.30 E 2028332.99 EL. 752.31
B.O.C. N 1236569.77 E 2028604.55 EL. 749.33
B.O.C. N 1236570.04 E 2028460.07 EL. 750.86
B.O.C. N 1237479.70 E 2029403.92 EL. 740.62
B.O.C. N 1237592.00 E 2029397.29 EL. 740.67
W.P. N 1237530.00 E 2028852.20 EL. 746.65
W.P. & 2-10" DIA. HDPE PIPES @ N 1238017.62 E 2028950.22 EL. 756.66
W.P. & 2-10" DIA. HDPE PIPES @ N 1237603.05 E 2029362.55 EL. 739.50
W.P. & 2-10" DIA. HDPE PIPES @ N 1237575.92 E 2029392.50 EL. 738.47
W.P. & 2-10" DIA. CAPPED HEADERS @ N 1236513.72; E 2028538.18 EL. 762.00
W.P. 10" DIA. HDPE PIPE @ N 1236751.16 E 2028294.21 EL. 760.58
W.P. 10" DIA. HDPE PIPE @ N 1236715.88; E 2028351.65 EL. 750.50
W.P. 10" DIA. CAPPED HEADER @ N 1237033.21; E 2027968.78 EL. 784.24
P.T. & DITCH @ N 1237039.23 E 2027890.34 EL. 775.58
P.I. & DITCH @ N 1236965.84 E 2027966.08 EL. 774.00
& 8' F.B. DITCH @ 1.50% GR.
N 1236841.05 E 2028086.38 EL. 771.40
N 1236830.25 E 2028096.79 EL. 765.40
2-10" DIA. HDPE PERF. PIPES 67.4 L.F. @ 14.96% GR.
N 1236534.98; E 2028381.23 EL. 759.25
N 1236524.17; E 2028391.64 EL. 753.25
P.C. & G.B. & DITCH @ N 1236520.08 E 2028656.48 EL. 748.30
& 8' F.B. DITCH @ 1.00% GR.
P.T. & G.B. & DITCH @ N 1237419.94 E 2029472.31 EL. 736.18
P.I. & DITCH @ N 1237517.09 E 2029560.40 R = 166.00'
& 8' F.B. DITCH @ 0.30% GR.
G.B. & DITCH @ N 1237746.70 E 2029379.18 EL. 735.91
END & DITCH @ N 1237672.28; E 2029449.92 EL. 735.50
W.P. & 2-10" DIA. HDPE PIPES @ N 1237664.98 E 2029437.21 EL. 739.01
W.P. & 2-10" DIA. CAPPED HEADERS @ N 1237994.78 E 2029022.56 EL. 767.20
W.P. & 2-10" DIA. HDPE PIPES @ N 1238087.58 E 2029019.23 EL. 755.47
PT & DITCH N 1238130.62; E 2028990.16 EL. 763.35
N 1238123.38; E 2028998.86 EL. 763.20
N 1238105.76 E 2029016.60 EL. 763.20
N 1237961.31 E 2029162.06 EL. 740.50
N 1237978.93 E 2029144.32 EL. 750.50
& 8' F.B. DITCH @ 1.50% GR.
& 8' F.B. DITCH @ 0.50% GR.
73.20'
81°27'0"
98°33'0"

CELL 1
LEACHATE COLLECTION SYSTEM
SCALE: 1" = 80'

NOTES:

1. SEE DRAWING H1C11124 FOR GENERAL NOTES AND LEGEND.
2. SEE DRAWING H1C11155 FOR DETAILS OF PIPES, TRENCHES AND BEDDING OF LEACHATE COLLECTION SYSTEM.
3. ALL 6" AND 10" DIAMETER PIPES ASSOCIATED WITH THE LEACHATE COLLECTION SYSTEM; I.E COLLECTION/LATERAL PIPES, HEADER PIPES, AND OUTFALL PIPES SHALL BE TYPE HDPE MAXIMUM RATED SDR-13.5. LATERAL AND HEADER PIPES SHALL BE PERFORATED. ALL CAPPED HEADER PIPE SHALL BE SOLID PIPE AND ALL OUTFALL PIPE SHALL BE DOUBLE CONTAINMENT PIPE AS NOTED IN THE DETAILS ON DRAWING H1C11155 AND IN THE SPECIFICATIONS. ALL LCRS PIPING SHOWN IS TO BE ASSEMBLED WITH FITTING TO FITTING CONNECTIONS.
4. PIPE WORKPOINT (W.P.) ELEVATIONS SHOWN ARE AT PIPE INVERTS.
5. GRADES SHOWN IN PLAN REPRESENT TOP OF 24" CLAY/SILT LAYER. LEACHATE TRENCH GRADES ARE NOT SHOWN AND ARE TO BE CONSTRUCTED PER TYPICAL DETAILS ON DRAWING H1C11155. NOTE THAT CELL BOTTOMS SHALL RECEIVE A 2 FOOT THICK SAND FILTER LAYER AND CELL SIDES SHALL RECEIVE A 1 FOOT THICK SAND FILTER LAYER UNDER A 1 FOOT THICK STONE COVER LAYER AS SHOWN IN DETAILS ON DRAWING H1C11155.

LEGEND:

← ─────	SOLID WALL PIPE IN TRENCH
← - - - - -	PERFORATED PIPE IN TRENCH
- - - 50 - - -	EXISTING GROUND CONTOURS
─── 50 ───	FINAL GRADE CONTOURS
⌖ XXX.XX	SPOT ELEVATIONS
─────	DOWNDRAINS
☁	TREELINE

REFERENCE DRAWINGS:

H1C11120	TITLE SHEET AND DRAWING INDEX
H1C11125	CELL NO. 1, SITE DEVELOPMENT, BASE GRADING PLAN
H1C11138	CELL NO. 1 THROUGH CELL NO. 3, MISCELLANEOUS SECTIONS, SH. 1
H1C11143	CELL NO. 1 THROUGH CELL NO. 3, MISCELLANEOUS DETAILS, SH. 1
H1C11155	CELL NO. 3, LEACHATE COLLECTION SYSTEM AND DETAILS

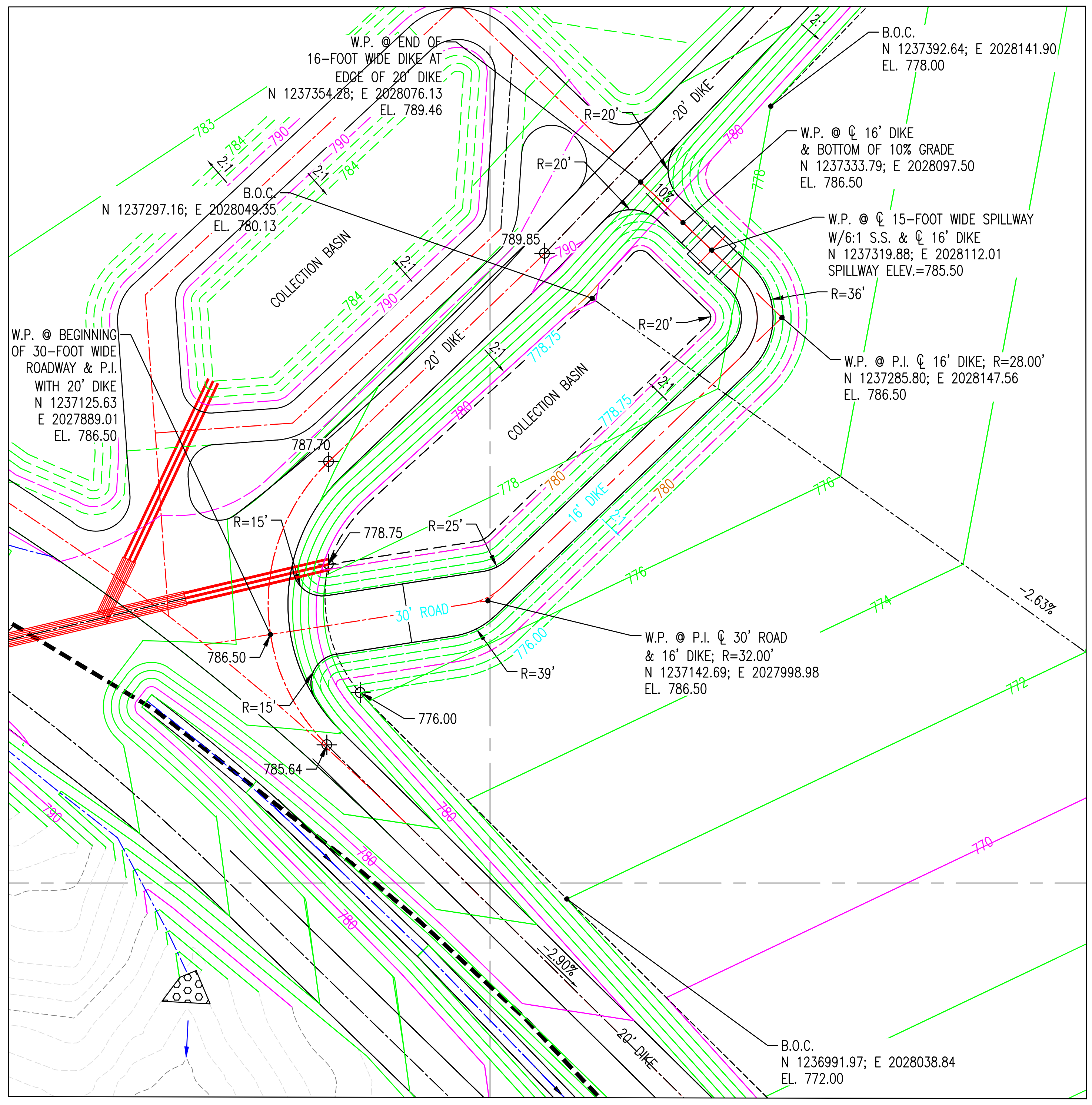
W.P. @ END OF 16-FOOT WIDE DIKE AT EDGE OF 20' DIKE N 1237354.28; E 2028076.13 EL. 789.46
B.O.C. N 1237392.64; E 2028141.90 EL. 778.00
N 1237297.16; E 2028049.35 EL. 780.13
W.P. @ & 16' DIKE & BOTTOM OF 10% GRADE N 1237333.79; E 2028097.50 EL. 786.50
W.P. @ & 15-FOOT WIDE SPILLWAY W/6:1 S.S. & & 16' DIKE N 1237319.88; E 2028112.01 SPILLWAY ELEV.=785.50
W.P. @ P.I. & 16' DIKE; R=28.00' N 1237285.80; E 2028147.56 EL. 786.50
W.P. @ BEGINNING OF 30-FOOT WIDE ROADWAY & P.I. WITH 20' DIKE N 1237125.63 E 2027889.01 EL. 786.50
W.P. @ P.I. & 30' ROAD & 16' DIKE; R=32.00' N 1237142.69; E 2027998.98 EL. 786.50
B.O.C. N 1236991.97; E 2028038.84 EL. 772.00
COLLECTION BASIN
COLLECTION BASIN
20' DIKE
30' ROAD
R=20'
R=36'
R=15'
R=25'
R=39'
789.85
787.70
778.75
786.50
776.00
785.64

CELL 1
COLLECTION BASINS
NO SCALE

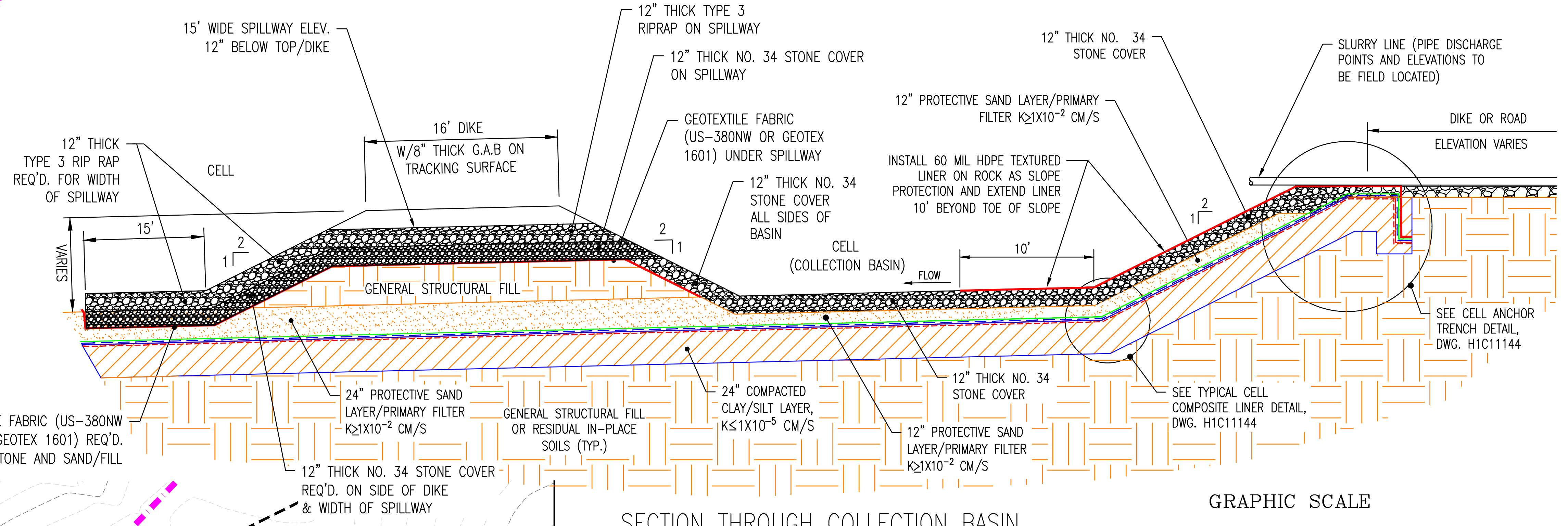
15' WIDE SPILLWAY ELEV. 12" BELOW TOP/DIKE
12" THICK TYPE 3 RIP RAP REQ'D. FOR WIDTH OF SPILLWAY
CELL
15'
VARIES
16' DIKE
W/8" THICK G.A.B ON TRACKING SURFACE
12" THICK TYPE 3 RIPRAP ON SPILLWAY
12" THICK NO. 34 STONE COVER ON SPILLWAY
GEOTEXTILE FABRIC (US-380NW OR GEOTEX 1601) UNDER SPILLWAY
12" THICK NO. 34 STONE COVER ALL SIDES OF BASIN
CELL (COLLECTION BASIN)
FLOW
10'
12" THICK NO. 34 STONE COVER
12" PROTECTIVE SAND LAYER/PRIMARY FILTER K≥1X10⁻² CM/S
INSTALL 60 MIL HDPE TEXTURED LINER ON ROCK AS SLOPE PROTECTION AND EXTEND LINER 10' BEYOND TOE OF SLOPE
SLURRY LINE (PIPE DISCHARGE POINTS AND ELEVATIONS TO BE FIELD LOCATED)
DIKE OR ROAD
ELEVATION VARIES
SEE CELL ANCHOR TRENCH DETAIL, DWG. H1C11144
SEE TYPICAL CELL COMPOSITE LINER DETAIL, DWG. H1C11144
12" THICK NO. 34 STONE COVER
12" PROTECTIVE SAND LAYER/PRIMARY FILTER K≥1X10⁻² CM/S
24" COMPACTED CLAY/SILT LAYER, K≤1X10⁻⁵ CM/S
GENERAL STRUCTURAL FILL OR RESIDUAL IN-PLACE SOILS (TYP.)
24" PROTECTIVE SAND LAYER/PRIMARY FILTER K≥1X10⁻² CM/S
GENERAL STRUCTURAL FILL
GEOTEXTILE FABRIC (US-380NW OR GEOTEX 1601) REQ'D. BETWEEN STONE AND SAND/FILL
12" THICK NO. 34 STONE COVER REQ'D. ON SIDE OF DIKE & WIDTH OF SPILLWAY
2
1

SECTION THROUGH COLLECTION BASIN AT SLURRY LINE DISCHARGE
NO SCALE

GRAPHIC SCALE

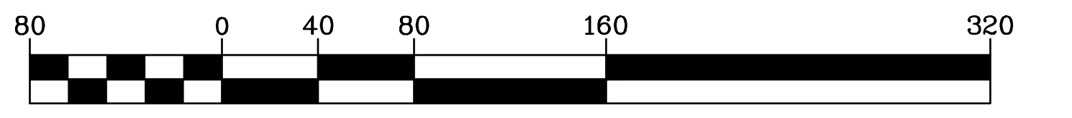
80
0
40
80
160
320

(IN FEET)
1 inch = 80 ft.

9/27/22

9/27/22

GEORGIA DEPARTMENT OF NATURAL RESOURCES
ENVIRONMENTAL PROTECTION DIVISION
Approved
Solid Waste Management Program
Approved By: Keith Stevens
Digitally signed by Keith Stevens
Date: 2022.10.25 08:59:48 -04'00'

Southern Company Generation
Engineering and Construction Services
FOR
Georgia Power Company

PLANT WANSLEY
COAL COMBUSTION BY-PRODUCT DISPOSAL FACILITY
GENERAL SITE DEVELOPMENT
CELL NO. 1
LEACHATE COLLECTION SYSTEM LAYOUT

REVISION 0 DATE 09-23-2022
CCR LF PERMIT APPLICATION [BY HHNT, INC.]

BY	CHK'D	CIVIL APPR	ELECT APPR	I/C APPR	MECH APPR	DISC MGR
ANR	RBL		☒	☒	☒	☒

SCALE	DRAWING NUMBER	SHEET	CONT'D	REV
1"=80'	H1C11153	1	FINAL	0

Acad2008 ANSI F: 40x28

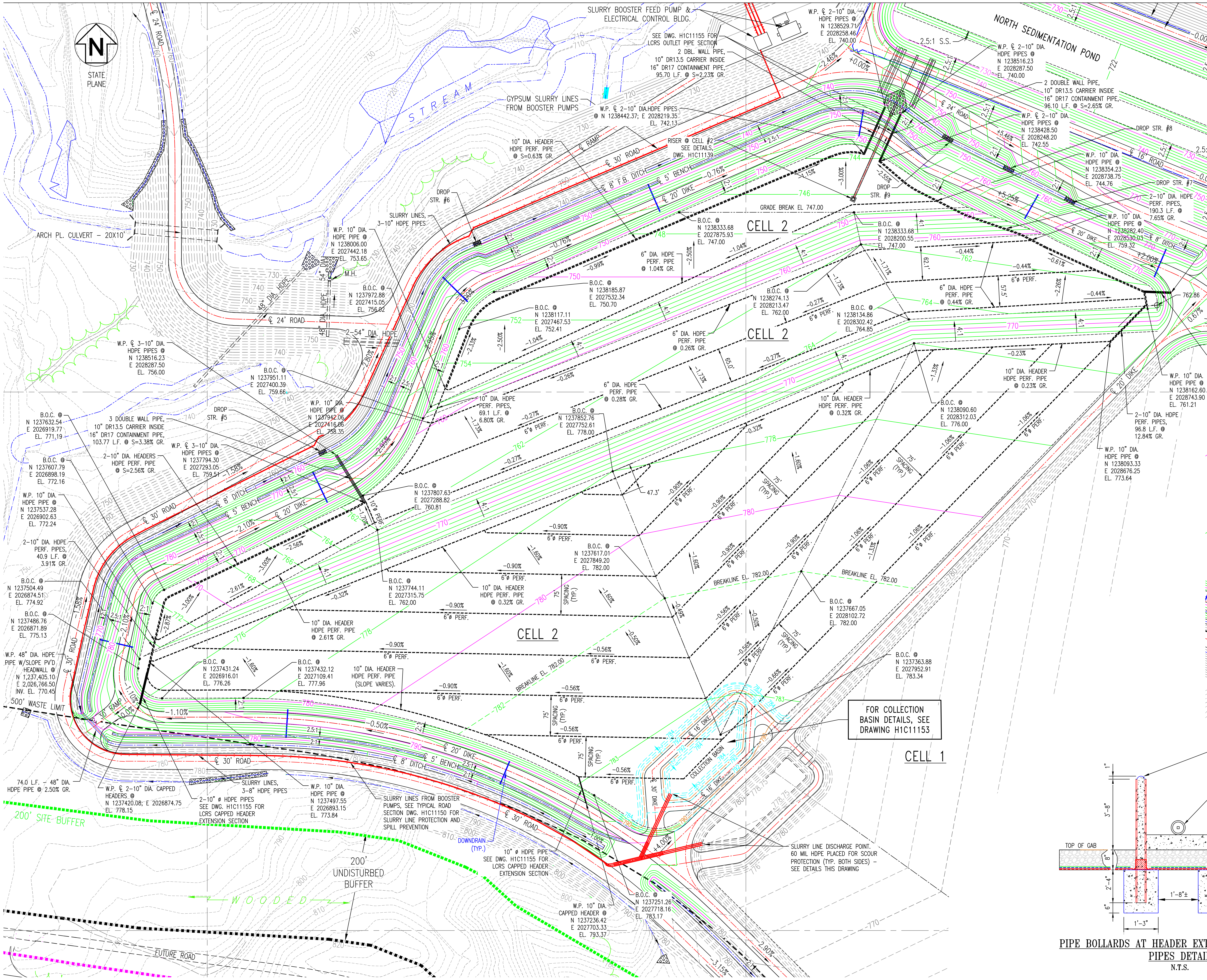
N
STATE PLANE
STREAM
NORTH SEDIMENTATION POND
SLURRY BOOSTER FEED PUMP & ELECTRICAL CONTROL BLDG.
SEE DWG. H1C11155 FOR LCRS OUTLET PIPE SECTION
GYPSUM SLURRY LINES FROM BOOSTER PUMPS
ARCH PL. CULVERT – 20X10'
℄ 24' ROAD
℄ 30' ROAD
CELL 2
CELL 1
GRADE BREAK EL 747.00
BREAKLINE EL. 782.00
FOR COLLECTION BASIN DETAILS, SEE DRAWING H1C11153
500' WASTE LIMIT
200' SITE BUFFER
200' UNDISTURBED BUFFER
WOODED
FUTURE ROAD
SLURRY LINE DISCHARGE POINT. 60 MIL HDPE PLACED FOR SCOUR PROTECTION (TYP. BOTH SIDES) – SEE DETAILS THIS DRAWING
SLURRY LINES FROM BOOSTER PUMPS, SEE TYPICAL ROAD SECTION DWG. H1C11150 FOR SLURRY LINE PROTECTION AND SPILL PREVENTION
DOWNDRAIN (TYP.)
74.0 L.F. – 48" DIA. HDPE PIPE @ 2.50% GR.
W.P. 48" DIA. HDPE PIPE W/SLOPE PV'D HEADWALL @ N 1,237,405.10 E 2,026,766.50 INV. EL. 770.45

CELL 2
LEACHATE COLLECTION SYSTEM

SCALE: 1" = 80'

GRAPHIC SCALE

80 0 40 80 160 320

(IN FEET)

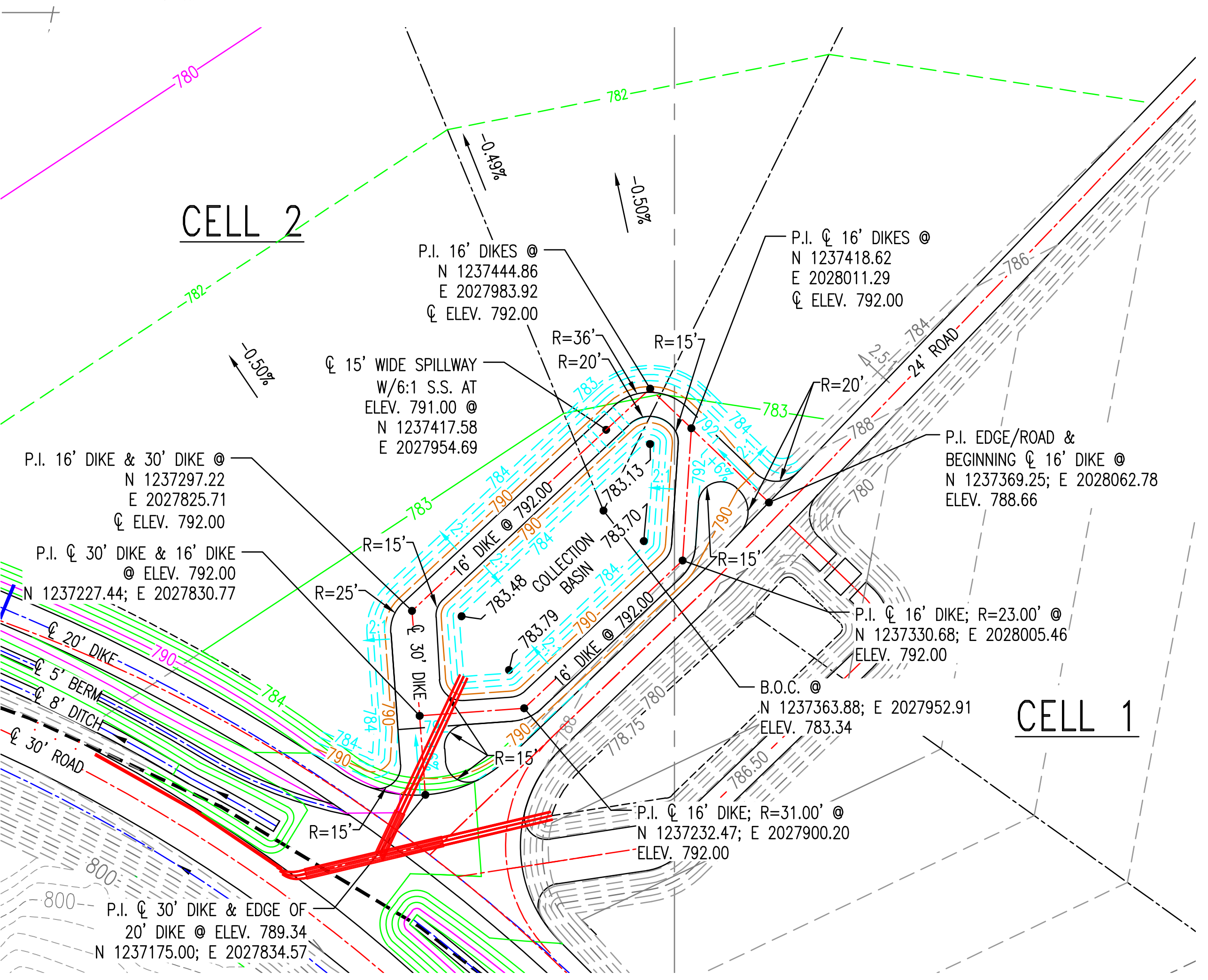
CELL 2
CELL 1
P.I. ℄ 16' DIKES @ N 1237418.62 E 2028011.29 ℄ ELEV. 792.00
P.I. EDGE/ROAD & BEGINNING OF ℄ 16' DIKE @ N 1237369.25; E 2028062.78 ELEV. 788.66
P.I. 16' DIKE & 30' DIKE @ N 1237297.22 E 2027825.71 ℄ ELEV. 792.00
℄ 15' WIDE SPILLWAY W/6:1 S.S. AT ELEV. 791.00 @ N 1237417.58 E 2027954.69
COLLECTION BASIN
24' ROAD
℄ 30' ROAD

CELL 2 COLLECTION BASINS DETAIL

NO SCALE

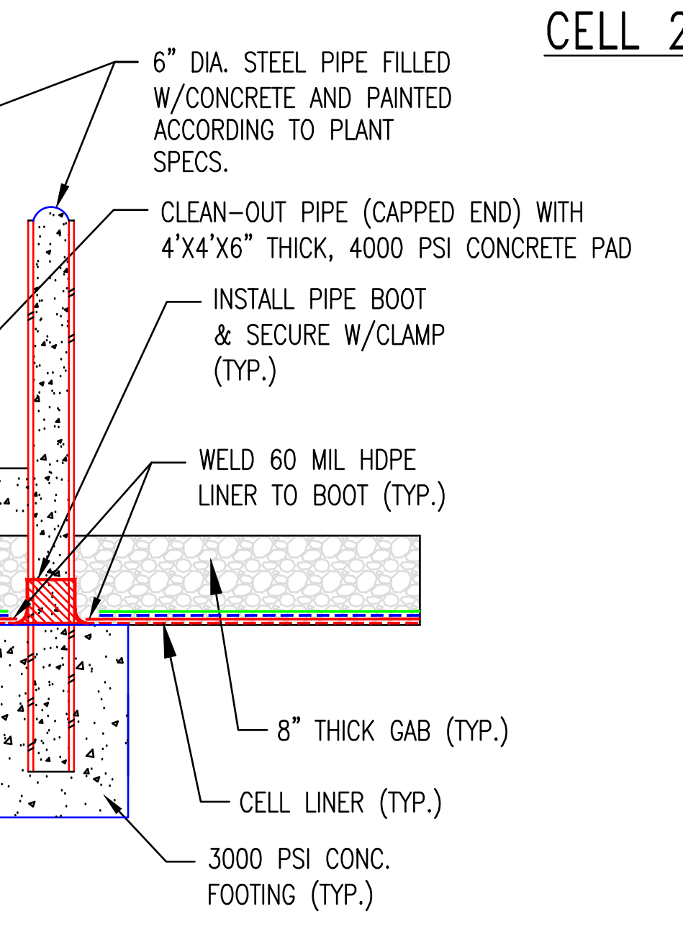
6" DIA. STEEL PIPE FILLED W/CONCRETE AND PAINTED ACCORDING TO PLANT SPECS.
CLEAN-OUT PIPE (CAPPED END) WITH 4'X4'X6" THICK, 4000 PSI CONCRETE PAD
INSTALL PIPE BOOT & SECURE W/CLAMP (TYP.)
WELD 60 MIL HDPE LINER TO BOOT (TYP.)
8" THICK GAB (TYP.)
CELL LINER (TYP.)
3000 PSI CONC. FOOTING (TYP.)
TOP OF GAB
3'-8"
2'-4"
1'-8"±
1'-3"

PIPE BOLLARDS AT HEADER EXTENSION CLEAN-OUT PIPES DETAIL

N.T.S.

LEGEND:

←	SOLID WALL PIPE IN TRENCH
← - - -	PERFORATED PIPE IN TRENCH
- - 50 - -	EXISTING GROUND CONTOURS
— 50 —	FINAL GRADE CONTOURS
⌖ XXX.XX	SPOT ELEVATIONS
—	DOWNDRAINS
	TREELINE

NOTES:

1. SEE DRAWING H1C11124 FOR GENERAL NOTES AND LEGEND.
2. SEE DRAWING H1C11155 FOR DETAILS OF PIPES, TRENCHES AND BEDDING OF LEACHATE COLLECTION SYSTEM.
3. ALL 6" AND 10" DIAMETER PIPES ASSOCIATED WITH THE LEACHATE COLLECTION SYSTEM; I.E COLLECTION/LATERAL PIPES, HEADER PIPES, AND OUTFALL PIPES SHALL BE TYPE HDPE MAXIMUM RATED SDR-13.5. LATERAL AND HEADER PIPES SHALL BE PERFORATED. ALL CAPPED HEADER PIPE SHALL BE SOLID PIPE AND ALL OUTFALL PIPE SHALL BE DOUBLE CONTAINMENT PIPE AS NOTED IN DETAILS ON DRAWING H1C11155 AND IN THE SPECIFICATIONS. ALL LCRS PIPING SHOWN IS TO BE ASSEMBLED WITH FITTING-TO-FITTING CONNECTIONS.
4. PIPE WORKPOINT (W.P.) ELEVATIONS SHOWN ARE AT PIPE INVERTS.
5. GRADES SHOWN IN PLAN REPRESENT TOP OF 24" CLAY/SILT LAYER. LEACHATE TRENCH GRADES ARE NOT SHOWN AND ARE TO BE CONSTRUCTED PER THE TYPICAL DETAILS ON DRAWING H1C11155. NOTE THAT CELL BOTTOMS SHALL RECEIVE 2 FOOT THICK SAND FILTER LAYER AND CELL SIDES SHALL RECEIVE 1 FOOT THICK SAND FILTER LAYER UNDER A 1 FOOT THICK STONE COVER LAYER AS SHOWN IN DETAILS ON DRAWING H1C11155.

REFERENCE DRAWINGS:

H1C11120	TITLE SHEET AND DRAWING INDEX
H1C11131	CELL NO. 2, SITE DEVELOPMENT, BASE GRADING PLAN
H1C11139	CELL 1 THROUGH CELL 3, MISCELLANEOUS SECTIONS, SHEET 2
H1C11140	CELL 1 THROUGH CELL 3, MISCELLANEOUS SECTIONS, SHEET 3
H1C11143	CELL 1 THROUGH CELL 3, MISCELLANEOUS DETAILS, SHEET 1
H1C11146	CELL 1 THROUGH CELL 3, MISCELLANEOUS SECTIONS & DETAILS, SH.1
H1C11147	CELL 1 THROUGH CELL 3, MISCELLANEOUS SECTIONS & DETAILS, SH.2
H1C11155	CELL NO. 3, LEACHATE COLLECTION SYSTEM LAYOUT AND DETAILS

GEORGIA
DEPARTMENT OF NATURAL RESOURCES
ENVIRONMENTAL PROTECTION DIVISION
Approved
Solid Waste Management Program
Approved By: Keith Stevens

NO. 27185 PROFESSIONAL ENGINEER R. BRANT LANE 9/27/22

No. 13097 PROFESSIONAL ENGINEER GARY H. McWHORTER 9/27/22

Southern Company Services, Inc.
Copyright© Southern Company Services, Inc. All Rights Reserved

REVISION	DATE	REVISION	DATE	REVISION	DATE	REVISION	DATE	REVISION	DATE	REVISION	DATE	REVISION 0	DATE 09-23-2022
												CCR LF PERMIT APPLICATION [BY HHNT, INC.]	

BY	CHK'D	CIVIL APPR	ELECT APPR	I/C APPR	MECH APPR	DISC MGR
ANR	RBL					

Southern Company Generation Engineering and Construction Services
FOR
Georgia Power Company

PLANT WANSLEY
COAL COMBUSTION BY-PRODUCT DISPOSAL FACILITY
GENERAL SITE DEVELOPMENT
CELL NO. 2
LEACHATE COLLECTION SYSTEM LAYOUT

SCALE	DRAWING NUMBER	SHEET	CONT'D	REV
1"=80'	H1C11154	1	FINAL	0

Acad2008 ANSI F: 40x28

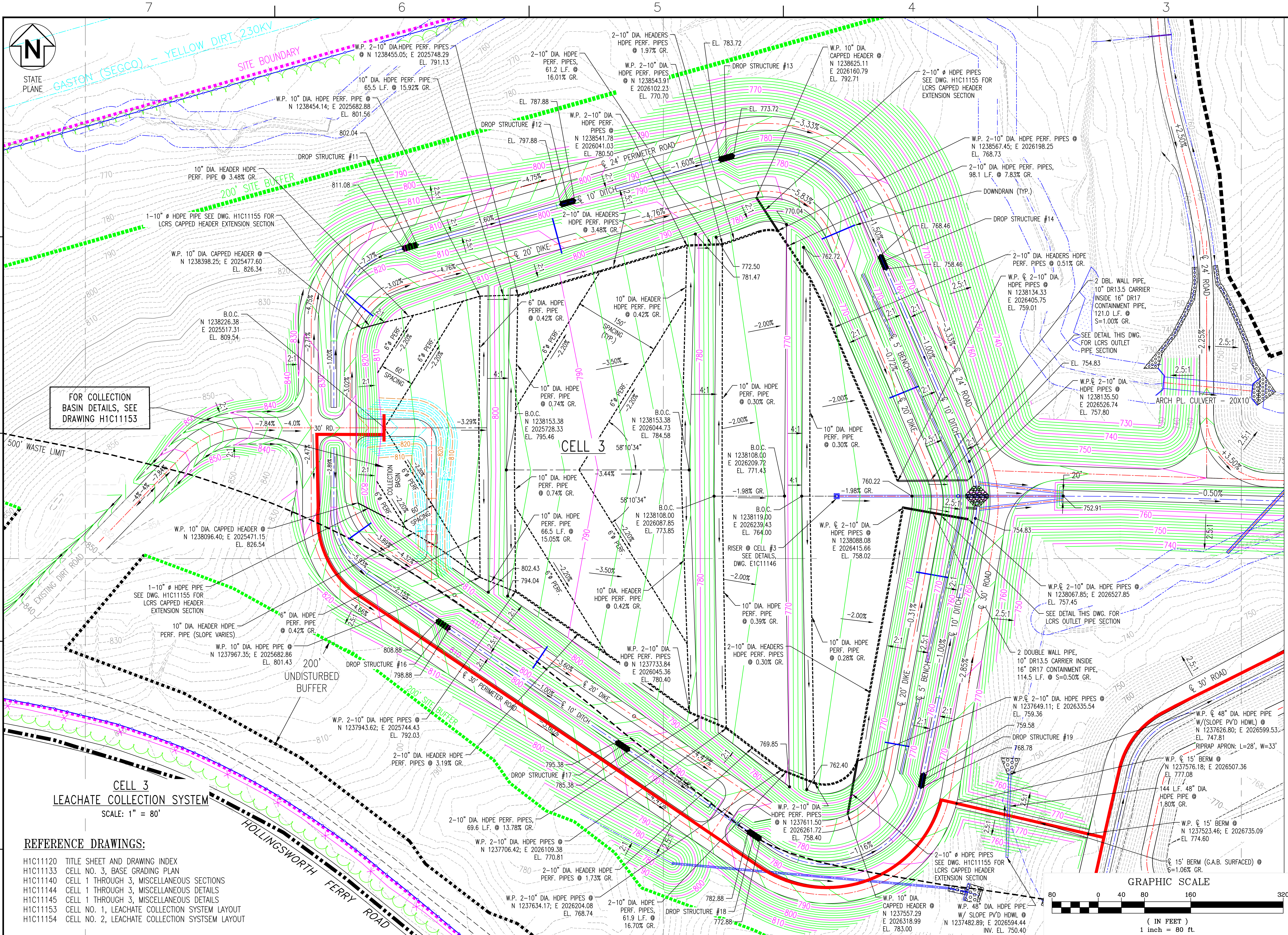
N
STATE PLANE
GASTON (SEGCO) - YELLOW DIRT 230KV
SITE BOUNDARY
200' SITE BUFFER
500' WASTE LIMIT
EXISTING DIRT ROAD
FOR COLLECTION BASIN DETAILS, SEE DRAWING H1C11153
CELL 3
58°10'34"
COLLECTION BASIN
200' UNDISTURBED BUFFER
HOLLINGSWORTH FERRY ROAD
W.P. 2-10" DIA.HDPE PERF. PIPES @ N 1238455.05; E 2025748.29 EL. 791.13
10" DIA. HDPE PERF. PIPE 65.5 L.F. @ 15.92% GR.
W.P. 10" DIA. HDPE PERF. PIPE @ N 1238454.14; E 2025682.88 EL. 801.56
10" DIA. HEADER HDPE PERF. PIPE @ 3.48% GR.
1-10" ø HDPE PIPE SEE DWG. H1C11155 FOR LCRS CAPPED HEADER EXTENSION SECTION
W.P. 10" DIA. CAPPED HEADER @ N 1238398.25; E 2025477.60 EL. 826.34
B.O.C. N 1238226.38 E 2025517.31 EL. 809.54
W.P. 10" DIA. CAPPED HEADER @ N 1238096.40; E 2025471.15 EL. 826.54
1-10" ø HDPE PIPE SEE DWG. H1C11155 FOR LCRS CAPPED HEADER EXTENSION SECTION
10" DIA. HEADER HDPE PERF. PIPE (SLOPE VARIES)
W.P. 10" DIA. HDPE PIPE @ N 1237967.35; E 2025682.86 EL. 801.43
6" DIA. HDPE PERF. PIPE @ 0.42% GR.
W.P. 2-10" DIA. HDPE PIPES @ N 1237943.62; E 2025744.43 EL. 792.03
2-10" DIA. HEADER HDPE PERF. PIPES @ 3.19% GR.
DROP STRUCTURE #11
DROP STRUCTURE #12
DROP STRUCTURE #13
DROP STRUCTURE #14
DROP STRUCTURE #16
DROP STRUCTURE #17
DROP STRUCTURE #18
DROP STRUCTURE #19
2-10" DIA. HDPE PERF. PIPES, 61.2 L.F. @ 16.01% GR.
2-10" DIA. HEADERS HDPE PERF. PIPES @ 1.97% GR.
W.P. 2-10" DIA. HDPE PERF. PIPES @ N 1238543.97 E 2026102.23 EL. 770.70
W.P. 2-10" DIA. HDPE PERF. PIPES @ N 1238541.78 E 2026041.03 EL. 780.50
2-10" DIA. HEADERS HDPE PERF. PIPES @ 3.48% GR.
W.P. 10" DIA. CAPPED HEADER @ N 1238625.11 E 2026160.79 EL. 792.71
2-10" ø HDPE PIPES SEE DWG. H1C11155 FOR LCRS CAPPED HEADER EXTENSION SECTION
W.P. 2-10" DIA. HDPE PERF. PIPES @ N 1238567.45; E 2026198.25 EL. 768.73
2-10" DIA. HDPE PERF. PIPES, 98.1 L.F. @ 7.83% GR.
DOWNDRAIN (TYP.)
2-10" DIA. HEADERS HDPE PERF. PIPES @ 0.51% GR.
W.P. ℄ 2-10" DIA. HDPE PIPES @ N 1238134.33 E 2026405.75 EL. 759.01
2 DBL. WALL PIPE, 10" DR13.5 CARRIER INSIDE 16" DR17 CONTAINMENT PIPE, 121.0 L.F. @ S=1.00% GR.
SEE DETAIL THIS DWG. FOR LCRS OUTLET PIPE SECTION
W.P.℄ 2-10" DIA. HDPE PIPES @ N 1238135.50 E 2026526.74 EL. 757.80
ARCH PL. CULVERT - 20X10'
6" DIA. HDPE PERF. PIPE @ 0.42% GR.
10" DIA. HEADER HDPE PERF. PIPE @ 0.42% GR.
10" DIA. HDPE PERF. PIPE @ 0.74% GR.
B.O.C. N 1238153.38 E 2025723.33 EL. 795.46
B.O.C. N 1238153.38 E 2026044.73 EL. 784.58
10" DIA. HDPE PERF. PIPE @ 0.30% GR.
B.O.C. N 1238108.00 E 2026209.72 EL. 771.43
RISER @ CELL #3 SEE DETAILS, DWG. E1C11146
10" DIA. HDPE PERF. PIPE 66.5 L.F. @ 15.05% GR.
B.O.C. N 1238108.00 E 2026087.85 EL. 773.85
10" DIA. HEADER HDPE PERF. PIPE @ 0.42% GR.
10" DIA. HDPE PIPE @ 0.39% GR.
10" DIA. HDPE PERF. PIPE @ 0.30% GR.
W.P. ℄ 2-10" DIA. HDPE PIPES @ N 1238088.08 E 2026415.66 EL. 758.02
W.P.℄ 2-10" DIA. HDPE PIPES @ N 1238087.85; E 2026527.85 EL. 757.45
SEE DETAIL THIS DWG. FOR LCRS OUTLET PIPE SECTION
2 DOUBLE WALL PIPE, 10" DR13.5 CARRIER INSIDE 16" DR17 CONTAINMENT PIPE, 114.5 L.F. @ S=0.50% GR.
10" DIA. HDPE PERF. PIPE @ 0.28% GR.
W.P. 2-10" DIA. HDPE PERF. PIPES @ N 1237733.84 E 2026045.36 EL. 780.40
2-10" DIA. HEADERS HDPE PERF. PIPE @ 0.30% GR.
W.P.℄ 2-10" DIA. HDPE PIPES @ N 1237649.11; E 2026335.54 EL. 759.36
W.P. ℄ 48" DIA. HDPE PIPE W/(SLOPE PV'D HDWL) @ N 1237626.80; E 2026599.53 EL. 747.81
RIPRAP APRON: L=28', W=33'
W.P. ℄ 15' BERM @ N 1237576.18; E 2026507.36 EL. 777.08
144 L.F. 48" DIA. HDPE PIPE @ 1.80% GR.
W.P. ℄ 15' BERM @ N 1237523.46; E 2026735.09 EL. 774.60
℄ 15' BERM (G.A.B. SURFACED) @ S=1.06% GR.
W.P. 2-10" DIA. HDPE PERF. PIPES @ N 1237611.50 E 2026261.72 EL. 758.40
2-10" ø HDPE PIPES SEE DWG. H1C11155 FOR LCRS CAPPED HEADER EXTENSION SECTION
W.P. 10" DIA. CAPPED HEADER @ N 1237557.29 E 2026318.99 EL. 783.00
W.P. 48" DIA. HDPE PIPE W/ SLOPE PV'D HDWL @ N 1237482.89; E 2026594.44 INV. EL. 750.40
2-10" DIA. HDPE PERF. PIPES, 69.6 L.F. @ 13.78% GR.
W.P. 2-10" DIA. HDPE PIPES @ N 1237706.42; E 2026109.38 EL. 770.81
2-10" DIA. HEADER HDPE PERF. PIPES @ 1.73% GR.
W.P. 2-10" DIA. HDPE PIPES @ N 1237634.17; E 2026204.08 EL. 768.74
2-10" DIA. HDPE PERF. PIPES, 61.9 L.F. @ 16.70% GR.
782.88
772.88
℄ 24' PERIMETER ROAD
℄ 20' DIKE
℄ 10' DITCH
℄ 30' PERIMETER ROAD
℄ 24' ROAD
℄ 30' ROAD
℄ 24' ROAD
℄ 10' DITCH
℄ 20' DIKE
5' BENCH
6" PERF.
60' SPACING
150' SPACING (TYP.)
30' RD.
GRAPHIC SCALE
80 0 40 80 160 320
(IN FEET)
1 inch = 80 ft.

CELL 3
LEACHATE COLLECTION SYSTEM

SCALE: 1" = 80'

REFERENCE DRAWINGS:

H1C11120	TITLE SHEET AND DRAWING INDEX
H1C11133	CELL NO. 3, BASE GRADING PLAN
H1C11140	CELL 1 THROUGH 3, MISCELLANEOUS SECTIONS
H1C11144	CELL 1 THROUGH 3, MISCELLANEOUS DETAILS
H1C11145	CELL 1 THROUGH 3, MISCELLANEOUS DETAILS
H1C11153	CELL NO. 1, LEACHATE COLLECTION SYSTEM LAYOUT
H1C11154	CELL NO. 2, LEACHATE COLLECTION SYSTSEM LAYOUT

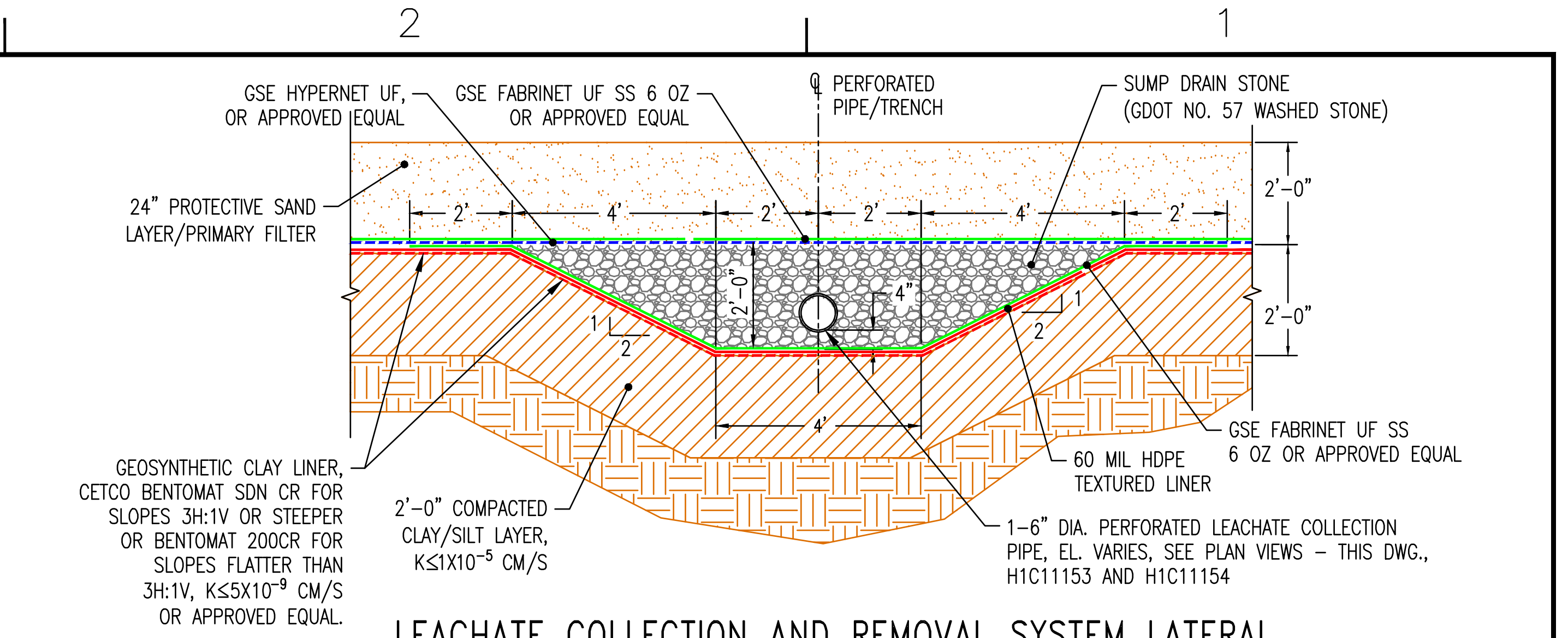
GSE HYPERNET UF, OR APPROVED EQUAL
GSE FABRINET UF SS 6 OZ OR APPROVED EQUAL
℄ PERFORATED PIPE/TRENCH
SUMP DRAIN STONE (GDOT NO. 57 WASHED STONE)
24" PROTECTIVE SAND LAYER/PRIMARY FILTER
2' 4' 2' 2' 4' 2'
2'-0"
2'-0"
4"
4'
GEOSYNTHETIC CLAY LINER, CETCO BENTOMAT SDN CR FOR SLOPES 3H:1V OR STEEPER OR BENTOMAT 200CR FOR SLOPES FLATTER THAN 3H:1V, K≤5X10⁻⁹ CM/S OR APPROVED EQUAL.
2'-0" COMPACTED CLAY/SILT LAYER, K≤1X10⁻⁵ CM/S
60 MIL HDPE TEXTURED LINER
GSE FABRINET UF SS 6 OZ OR APPROVED EQUAL
1-6" DIA. PERFORATED LEACHATE COLLECTION PIPE, EL. VARIES, SEE PLAN VIEWS - THIS DWG., H1C11153 AND H1C11154

LEACHATE COLLECTION AND REMOVAL SYSTEM LATERAL

N.T.S.

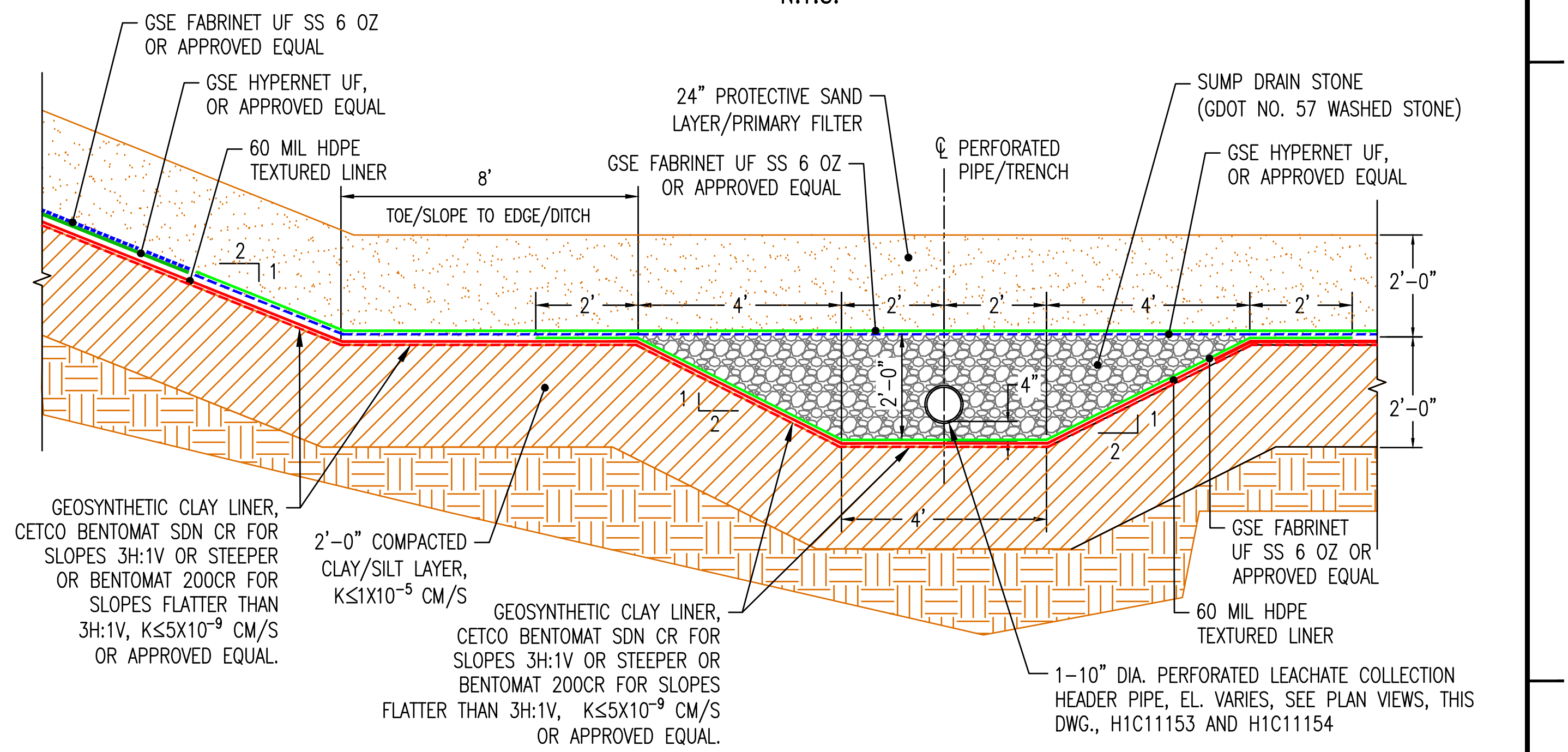
GSE FABRINET UF SS 6 OZ OR APPROVED EQUAL
GSE HYPERNET UF, OR APPROVED EQUAL
60 MIL HDPE TEXTURED LINER
8'
TOE/SLOPE TO EDGE/DITCH
GSE FABRINET UF SS 6 OZ OR APPROVED EQUAL
24" PROTECTIVE SAND LAYER/PRIMARY FILTER
℄ PERFORATED PIPE/TRENCH
SUMP DRAIN STONE (GDOT NO. 57 WASHED STONE)
GSE HYPERNET UF, OR APPROVED EQUAL
2' 4' 2' 2' 4' 2'
2'-0"
2'-0"
4"
4'
GEOSYNTHETIC CLAY LINER, CETCO BENTOMAT SDN CR FOR SLOPES 3H:1V OR STEEPER OR BENTOMAT 200CR FOR SLOPES FLATTER THAN 3H:1V, K≤5X10⁻⁹ CM/S OR APPROVED EQUAL.
2'-0" COMPACTED CLAY/SILT LAYER, K≤1X10⁻⁵ CM/S
GEOSYNTHETIC CLAY LINER, CETCO BENTOMAT SDN CR FOR SLOPES 3H:1V OR STEEPER OR BENTOMAT 200CR FOR SLOPES FLATTER THAN 3H:1V, K≤5X10⁻⁹ CM/S OR APPROVED EQUAL.
GSE FABRINET UF SS 6 OZ OR APPROVED EQUAL
60 MIL HDPE TEXTURED LINER
1-10" DIA. PERFORATED LEACHATE COLLECTION HEADER PIPE, EL. VARIES, SEE PLAN VIEWS, THIS DWG., H1C11153 AND H1C11154

LEACHATE COLLECTION AND REMOVAL SYSTEM
HEADER - SINGLE PIPE DETAIL

N.T.S.

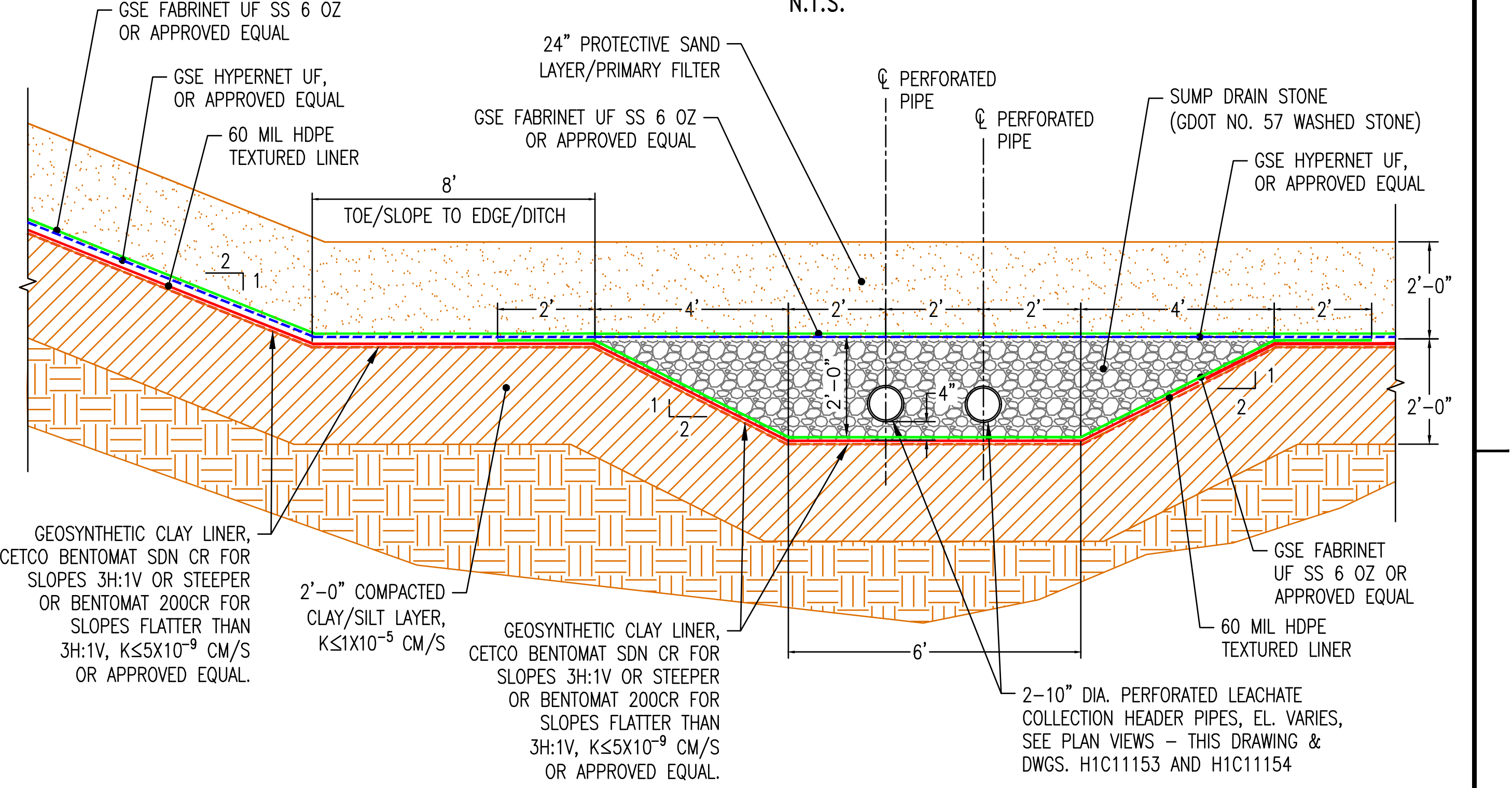
GSE FABRINET UF SS 6 OZ OR APPROVED EQUAL
GSE HYPERNET UF, OR APPROVED EQUAL
60 MIL HDPE TEXTURED LINER
8'
TOE/SLOPE TO EDGE/DITCH
24" PROTECTIVE SAND LAYER/PRIMARY FILTER
GSE FABRINET UF SS 6 OZ OR APPROVED EQUAL
℄ PERFORATED PIPE
℄ PERFORATED PIPE
SUMP DRAIN STONE (GDOT NO. 57 WASHED STONE)
GSE HYPERNET UF, OR APPROVED EQUAL
2' 4' 2' 2' 2' 4' 2'
2'-0"
2'-0"
4"
6'
GEOSYNTHETIC CLAY LINER, CETCO BENTOMAT SDN CR FOR SLOPES 3H:1V OR STEEPER OR BENTOMAT 200CR FOR SLOPES FLATTER THAN 3H:1V, K≤5X10⁻⁹ CM/S OR APPROVED EQUAL.
2'-0" COMPACTED CLAY/SILT LAYER, K≤1X10⁻⁵ CM/S
GEOSYNTHETIC CLAY LINER, CETCO BENTOMAT SDN CR FOR SLOPES 3H:1V OR STEEPER OR BENTOMAT 200CR FOR SLOPES FLATTER THAN 3H:1V, K≤5X10⁻⁹ CM/S OR APPROVED EQUAL.
GSE FABRINET UF SS 6 OZ OR APPROVED EQUAL
60 MIL HDPE TEXTURED LINER
2-10" DIA. PERFORATED LEACHATE COLLECTION HEADER PIPES, EL. VARIES, SEE PLAN VIEWS - THIS DRAWING & DWGS. H1C11153 AND H1C11154

LEACHATE COLLECTION AND REMOVAL SYSTEM
HEADER - DOUBLE PIPE DETAIL

N.T.S.

LEGEND:

🟥	SOLID WALL PIPE IN TRENCH
- - -	PERFORATED PIPE IN TRENCH
- - 700 - -	EXISTING GROUND CONTOURS
— 700 —	FINAL GRADE CONTOURS
⊖ XXX.XX	SPOT ELEVATIONS
—	DOWNDRAIN
☁	TREELINE

NOTES:

1. SEE DRAWING H1C11124 FOR GENERAL NOTES AND LEGEND.
2. ALL 6" AND 10" DIAMETER PIPES ASSOCIATED WITH THE LEACHATE COLLECTION SYSTEM; I.E COLLECTION/LATERAL PIPES, HEADER PIPES, AND OUTFALL PIPES SHALL BE TYPE HDPE MAXIMUM RATED SDR-13.5. LATERAL AND HEADER PIPES SHALL BE PERFORATED. ALL CAPPED HEADER PIPE SHALL BE SOLID WALL AND ALL OUTFALL PIPE SHALL BE DOUBLE CONTAINMENT PIPE AS NOTED IN DETAILS ON THIS DRAWING AND IN THE SPECIFICATIONS. ALL LCRS PIPING SHOWN IS TO BE ASSEMBLED WITH FITTING-TO-FITTING CONNECTIONS.
3. PERFORATED PIPE SHALL HAVE AASHTO CLASS 1 PERFORATIONS - 3 ROWS OF PERFORATIONS REQ'D (TOTAL OF 6 PER FT OF PIPE). EACH PERFORATION SHALL BE 0.4" DIA. CIRCULAR AT 60 DEGREES OFF CENTERLINE OF BOTTOM OF PIPE.
4. PIPE WORKPOINT (W.P.) ELEVATIONS SHOWN ARE AT THE PIPE INVERTS.
5. GRADES SHOWN IN PLAN REPRESENT TOP OF 24" CLAY/SILT LAYER. LEACHATE TRENCH GRADES ARE NOT SHOWN AND ARE TO BE CONSTRUCTED PER TYPICAL DETAILS ON THIS DRAWING. NOTE THAT CELL BOTTOMS SHALL RECEIVE A 2 FOOT THICK SAND FILTER LAYER AS SHOWN IN DETAILS. CELL SIDES SHALL RECEIVE A 1 FOOT THICK SAND FILTER LAYER UNDER A 1 FOOT THICK STONE COVER LAYER AS SHOWN IN DETAILS.
6. THE SECTIONS SHOWN ON THIS DRAWING REPRESENT TYPICAL CONFIGURATIONS FOR THE CELLS, PERIMETER DITCHES, AND LEACHATE COLLECTION SYSTEM. ACTUAL CONDITIONS WILL VARY TO INCLUDE BOTH CUT AND FILL AREAS, THEREFORE THE SUBGRADE MATERIAL FOR THE CLAY LINER COULD CONSIST OF EITHER RESIDUAL, INPLACE SOILS OR GENERAL STRUCTURAL FILL. REFERENCE THE CONSTRUCTION SPECIFICATIONS FOR PROOF-ROLLING CRITERIA FOR IN-PLACE SOILS AND THE PLACEMENT AND COMPACTION CRITERIA FOR GENERAL STRUCTURAL FILL.

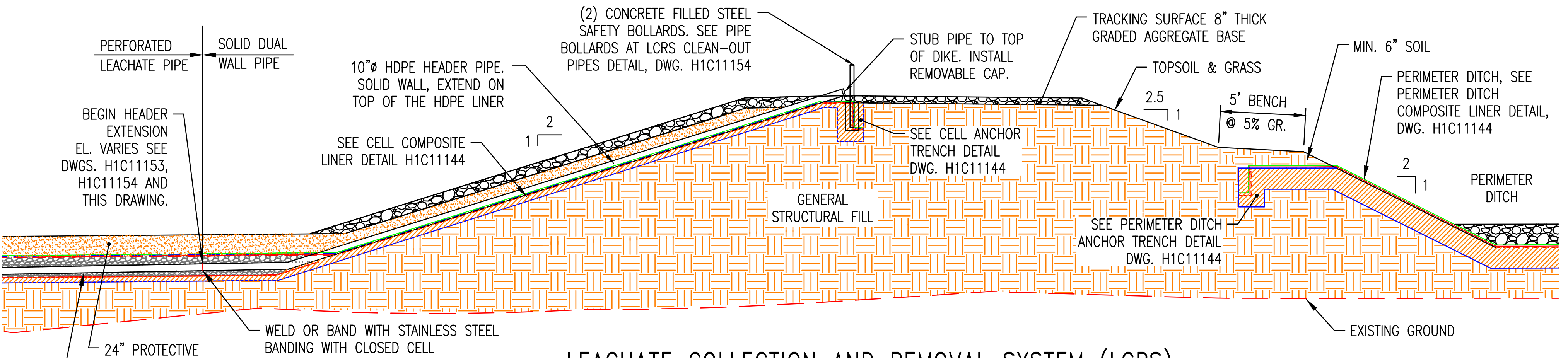
PERFORATED LEACHATE PIPE
SOLID DUAL WALL PIPE
BEGIN HEADER EXTENSION EL. VARIES SEE DWGS. H1C11153, H1C11154 AND THIS DRAWING.
10"ø HDPE HEADER PIPE. SOLID WALL, EXTEND ON TOP OF THE HDPE LINER
SEE CELL COMPOSITE LINER DETAIL H1C11144
(2) CONCRETE FILLED STEEL SAFETY BOLLARDS. SEE PIPE BOLLARDS AT LCRS CLEAN-OUT PIPES DETAIL, DWG. H1C11154
STUB PIPE TO TOP OF DIKE. INSTALL REMOVABLE CAP.
TRACKING SURFACE 8" THICK GRADED AGGREGATE BASE
TOPSOIL & GRASS
MIN. 6" SOIL
2.5 1
5' BENCH @ 5% GR.
2 1
SEE CELL ANCHOR TRENCH DETAIL DWG. H1C11144
GENERAL STRUCTURAL FILL
SEE PERIMETER DITCH ANCHOR TRENCH DETAIL DWG. H1C11144
PERIMETER DITCH, SEE PERIMETER DITCH COMPOSITE LINER DETAIL, DWG. H1C11144
PERIMETER DITCH
EXISTING GROUND
24" PROTECTIVE SAND LAYER/PRIMARY FILTER
WELD OR BAND WITH STAINLESS STEEL BANDING WITH CLOSED CELL NEOPHRENE OR APPROVED EQUAL TO ENSURE WATERTIGHT SEAL
10"ø PERFORATED LCRS PIPE SEE LEACHATE COLLECTION AND REMOVAL SYSTEM HEADER DETAILS, THIS DRAWING

LEACHATE COLLECTION AND REMOVAL SYSTEM (LCRS)
CAPPED HEADER EXTENSION SECTION

N.T.S.

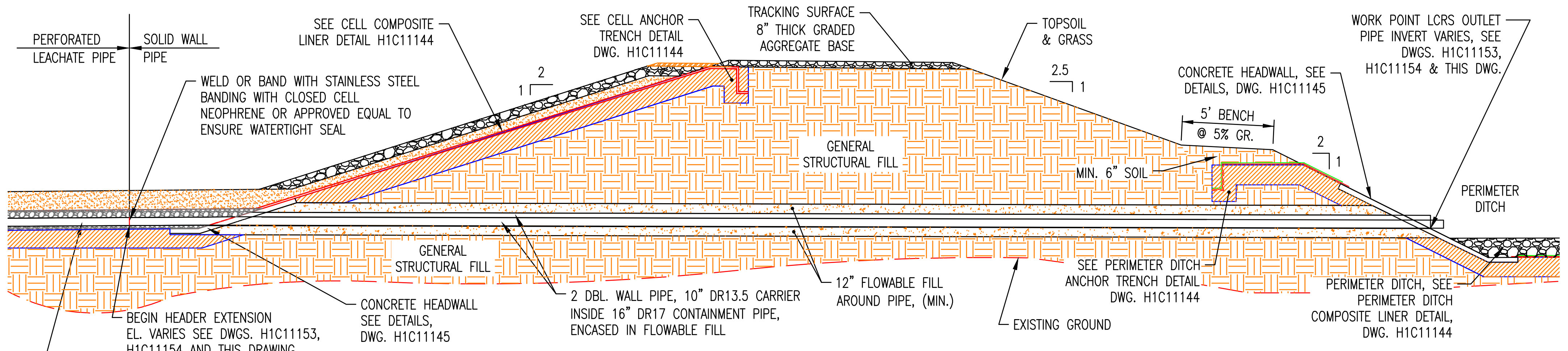
PERFORATED LEACHATE PIPE
SOLID WALL PIPE
WELD OR BAND WITH STAINLESS STEEL BANDING WITH CLOSED CELL NEOPHRENE OR APPROVED EQUAL TO ENSURE WATERTIGHT SEAL
SEE CELL COMPOSITE LINER DETAIL H1C11144
SEE CELL ANCHOR TRENCH DETAIL DWG. H1C11144
TRACKING SURFACE 8" THICK GRADED AGGREGATE BASE
TOPSOIL & GRASS
2 1
2.5 1
CONCRETE HEADWALL, SEE DETAILS, DWG. H1C11145
WORK POINT LCRS OUTLET PIPE INVERT VARIES, SEE DWGS. H1C11153, H1C11154 & THIS DWG.
5' BENCH @ 5% GR.
MIN. 6" SOIL
GENERAL STRUCTURAL FILL
GENERAL STRUCTURAL FILL
PERIMETER DITCH
BEGIN HEADER EXTENSION EL. VARIES SEE DWGS. H1C11153, H1C11154 AND THIS DRAWING.
CONCRETE HEADWALL SEE DETAILS, DWG. H1C11145
2 DBL. WALL PIPE, 10" DR13.5 CARRIER INSIDE 16" DR17 CONTAINMENT PIPE, ENCASED IN FLOWABLE FILL
12" FLOWABLE FILL AROUND PIPE, (MIN.)
EXISTING GROUND
SEE PERIMETER DITCH ANCHOR TRENCH DETAIL DWG. H1C11144
PERIMETER DITCH, SEE PERIMETER DITCH COMPOSITE LINER DETAIL, DWG. H1C11144
10"ø PERFORATED LCRS PIPE SEE LEACHATE COLLECTION AND REMOVAL SYSTEM HEADER DETAILS, THIS DRAWING

LEACHATE COLLECTION AND REMOVAL SYSTEM (LCRS)
OUTLET PIPE SECTION

N.T.S.

GEORGIA REGISTERED NO. 27185 PROFESSIONAL ENGINEER R. BRANT LANE 9/27/22

GEORGIA REGISTERED No. 19907 PROFESSIONAL ENGINEER GARY H. McWHORTER 9/27/22

GEORGIA
DEPARTMENT OF NATURAL RESOURCES
ENVIRONMENTAL PROTECTION DIVISION
Approved
Solid Waste Management Program
Approved By: Keith Stevens Digitally signed by Keith Stevens Date: 2022.10.25 08:59:48 -04'00'

REVISION	DATE	REVISION	DATE	REVISION	DATE	REVISION	DATE	REVISION 0	DATE 09-23-2022
								CCR LF PERMIT APPLICATION [BY HHNT, INC.]	

BY	CHK'D	CIVIL APPR	ELECT APPR	I/C APPR	MECH APPR	DISC MGR
ANR	RBL		☒	☒	☒	☒

Southern Company Generation
Engineering and Construction Services
FOR

Georgia Power Company

PLANT WANSLEY
COAL COMBUSTION BY-PRODUCT DISPOSAL FACILITY
GENERAL SITE DEVELOPMENT
CELL NO. 3
LEACHATE COLLECTION SYSTEM LAYOUT & DETAILS

SCALE	DRAWING NUMBER	SHEET	CONT'D	REV
AS NOTED	H1C11155	1	FINAL	0

Acad2008 ANSI F: 40x28

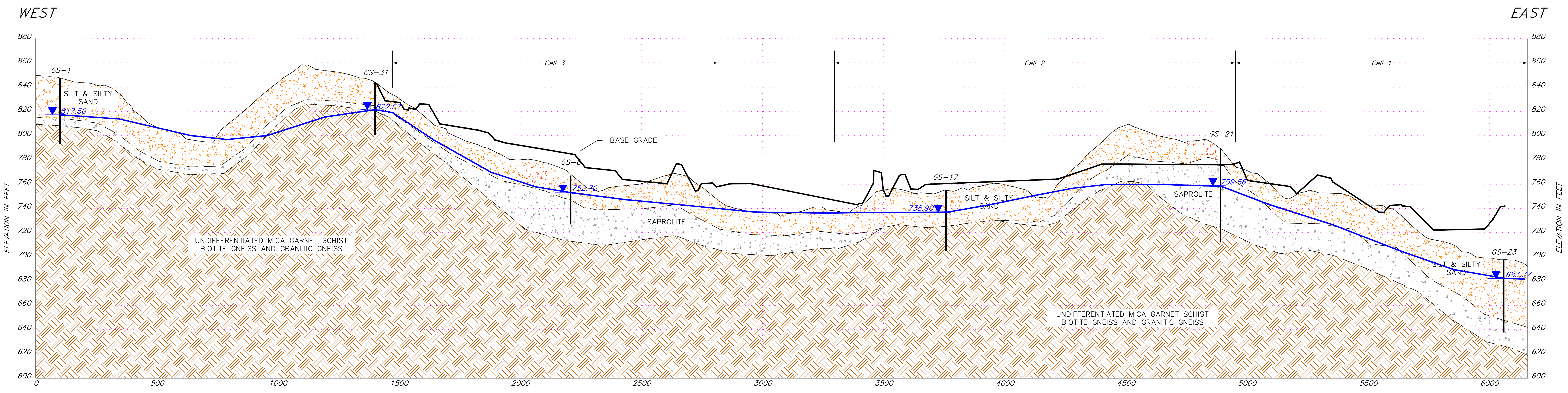
WEST
EAST
ELEVATION IN FEET
880
860
840
820
800
780
760
740
720
700
680
660
640
620
600
0
500
1000
1500
2000
2500
3000
3500
4000
4500
5000
5500
6000
Cell 3
Cell 2
Cell 1
GS-1
SILT & SILTY SAND
817.50
GS-31
822.57
BASE GRADE
GS-6
752.70
SAPROLITE
UNDIFFERENTIATED MICA GARNET SCHIST BIOTITE GNEISS AND GRANITIC GNEISS
GS-17
738.90
SILT & SILTY SAND
GS-21
759.66
SAPROLITE
GS-23
SILT & SILTY SAND
683.37
UNDIFFERENTIATED MICA GARNET SCHIST BIOTITE GNEISS AND GRANITIC GNEISS

GEOLOGIC CROSS-SECTION A-A

SCALE H: 1"=200' V: 1"=40'

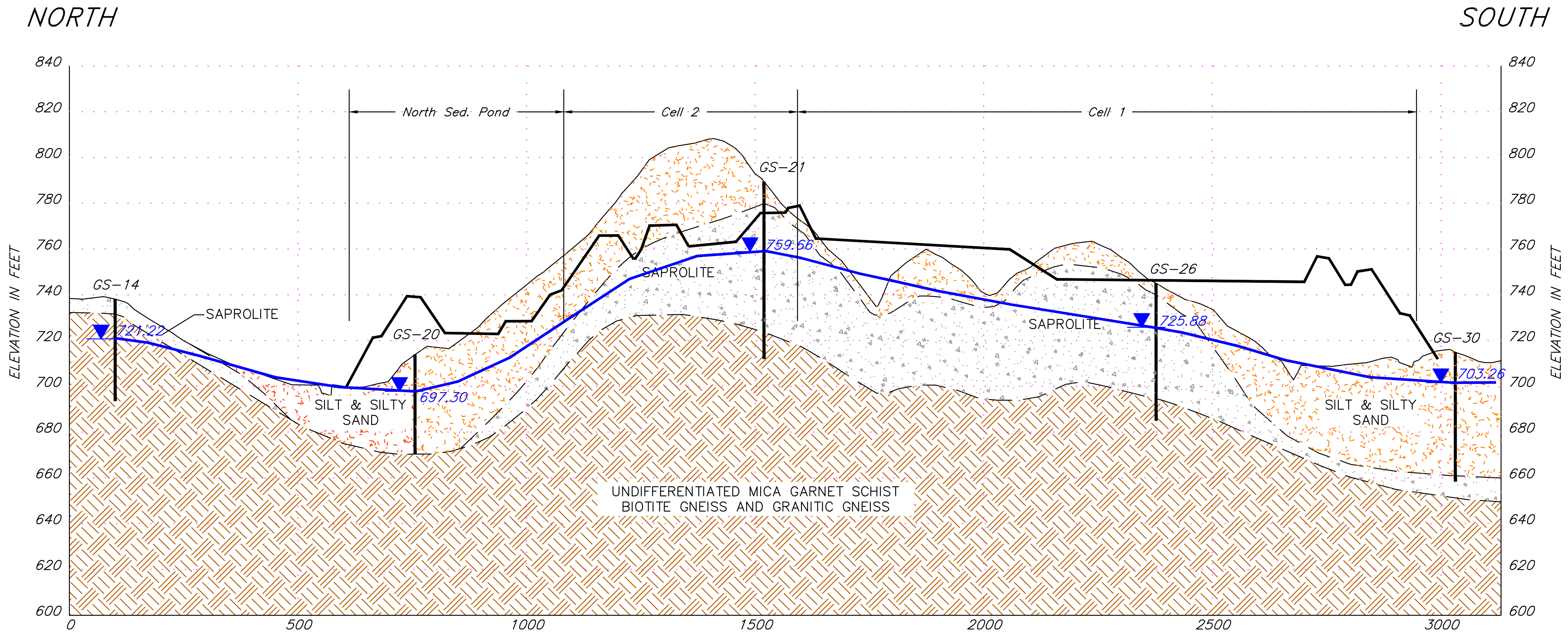
NORTH
SOUTH
ELEVATION IN FEET
840
820
800
780
760
740
720
700
680
660
640
620
600
0
500
1000
1500
2000
2500
3000
North Sed. Pond
Cell 2
Cell 1
GS-14
721.22
SAPROLITE
GS-20
697.30
SILT & SILTY SAND
GS-21
759.66
SAPROLITE
GS-26
725.88
SAPROLITE
GS-30
703.26
SILT & SILTY SAND
UNDIFFERENTIATED MICA GARNET SCHIST BIOTITE GNEISS AND GRANITIC GNEISS

GEOLOGIC CROSS-SECTION B-B

SCALE H: 1"=200' V: 1"=40'

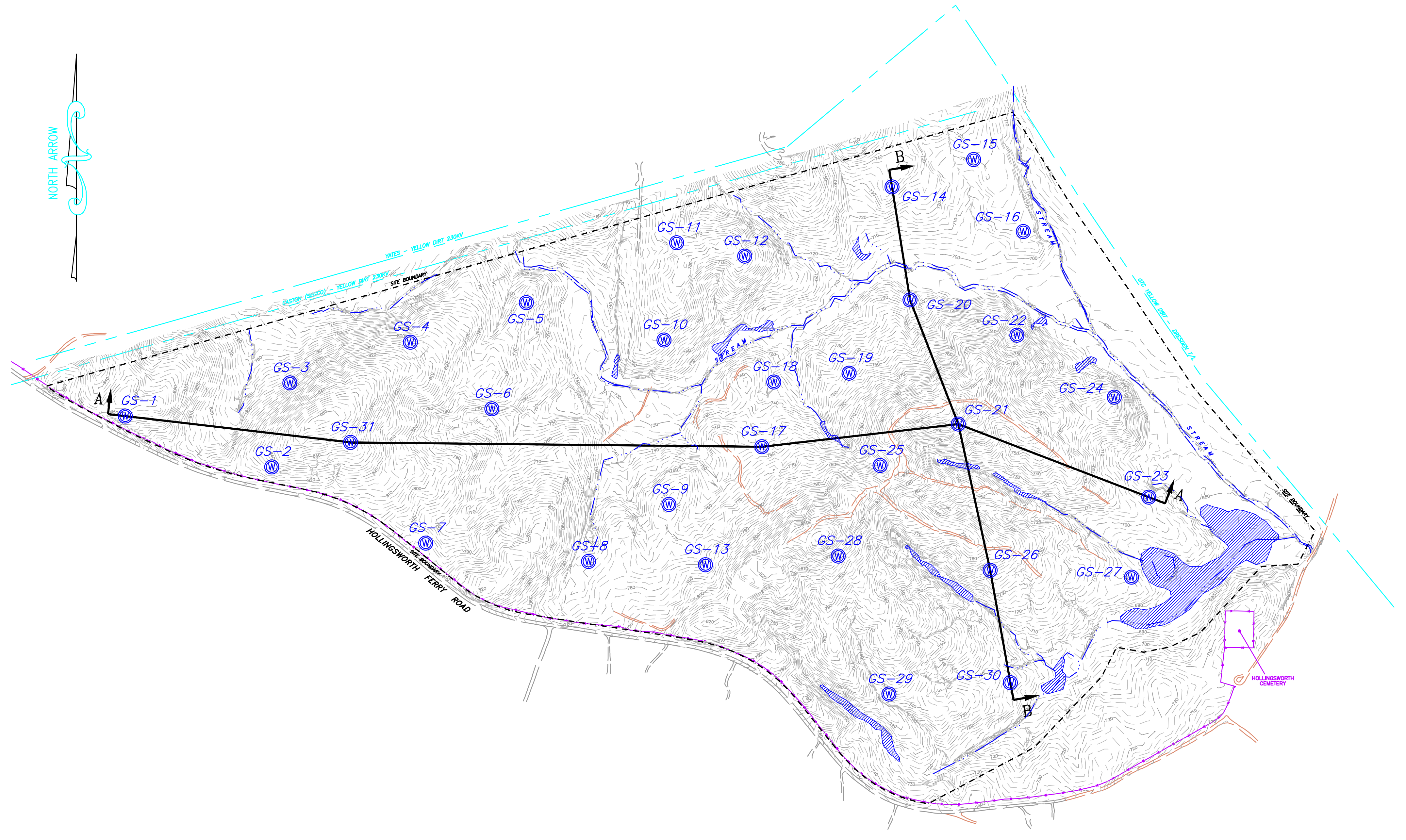
A
A'
B
B'
GS-1
GS-2
GS-3
GS-4
GS-5
GS-6
GS-7
GS-8
GS-9
GS-10
GS-11
GS-12
GS-13
GS-14
GS-15
GS-16
GS-17
GS-18
GS-19
GS-20
GS-21
GS-22
GS-23
GS-24
GS-25
GS-26
GS-27
GS-28
GS-29
GS-30
GS-31
HOLLINGSWORTH FERRY ROAD

KEY PLAN

SCALE : 1"=500'

LEGEND:

▼ HIGH GROUNDWATER ELEVATION FROM NOVEMBER 17, 2006

GS-1 | PIEZOMETER

— BASE GRADE

The information provided on this drawing was originally prepared by qualified groundwater scientists at Southern Company Generation Engineering and Construction Services in August 2009 in support of the Industrial Solid Waste Permit 074-005D(LI). The drawing was subsequently modified with final approval from EPD occurring in May 2012. All noted submittals were sealed by a professional engineer and professional geologist licensed in the state of Georgia. The information on this sheet is provided for reference only and has not been amended by Hodges, Harbin, Newberry and Tribble, Inc. or Bunnell Lammons Engineering, Inc.

ANDREW W. ALEXANDER No.1485

GEORGIA No. 27185 R. BRANT LANE 9/27/22

GEORGIA Department of Natural Resources
Environmental Protection Division
Approved
Solid Waste Management Program
Approved By: Keith Stevens Digitally signed by Keith Stevens Date: 2022.10.25 08:59:48 -04'00'

Southern Company Generation
Engineering and Construction Services
FOR

Georgia Power Company

PLANT WANSLEY
COAL COMBUSTION BY-PRODUCT DISPOSAL FACILITY
GEOLOGIC CROSS SECTION A-A' AND B-B'

REVISION 0 DATE 09-23-2022
CCR LF PERMIT APPLICATION [BY HHNT, INC.]

BY	CHK'D	CIVIL APPR	ELECT APPR	I/C APPR	MECH APPR	DISC MGR	SCALE	PROJ I.D.	DRAWING NUMBER	SHEET	CONT'D	REV
ANR	RBL						AS SHOWN	010505	**H1C11160**	1	FINAL	0

ANSI F: 40x28 Acad2008

7
6
5
4
3
2
1
F
E
D
C
B
A
NORTH ARROW
PLANT WANSLEY
SITE
GA. POWER RD.
HOLLINGSWORTH FERRY RD.
S. BRIDGE RD.
FIVE NOTCH RD.
HEARD CO.
COWETA CO.
CHATTAHOOCHEE RIVER
LOCATION MAP
N 1240000
N 1239000
N 1238000
N 1237000
N 1236000
E 2024000
E 2025000
E 2026000
E 2027000
E 2028000
E 2029000
E 2030000
YATES - YELLOW DIRT 230KV
BASTON - YELLOW DIRT 230KV
SITE BOUNDARY
200' SITE BUFFER
BUFFER BOUNDARY
OTC YELLOW DIRT - ORIGEN I/L
STREAM
WOODED
HIGH UNDER-BRUSH
HOLLINGSWORTH FERRY ROAD
GPC P/L
GPCO P/L
HOLLINGSWORTH CEMETERY
INV. EL.=670.3
INV. EL.=671.2
84"CMP'S
GS-1 817.5
GS-2 803.75
GS-3 777.07
GS-4 791.8
GS-5 749.44
GS-6 750.16
GS-7 756.78
GS-8 750.85
GS-9 749.6
GS-10 729.18
GS-11 734.02
GS-12 727.52
GS-13 765.27
GS-14 719.55
GS-15 707.1
GS-16 692.67
GS-17 736.12
GS-18 718.38
GS-19 DRY
GS-20 697.03
GS-21 757.08
GS-22
GS-23 DRY
GS-24 686.03
GS-25 770.42
GS-26 719.25
GS-27 689.06
GS-28 773.49
GS-29 729.86
GS-30 702.62
GS-31 819.46

PROPOSED SECURITY ROAD LIMITS OF CLEARING AND GRUBBING

Well #	Top of Casing	NORTHING	EASTING	Depth to GW	GW Elev.
GS-1	850.30	1238147.82	2023921.75	32.80	817.50
GS-2	837.07	1237856.24	2024760.49	33.32	803.75
GS-3	806.32	1238337.09	2024864.70	29.25	777.07
GS-4	808.99	1238570.93	2025555.30	17.19	791.80
GS-5	775.97	1238796.98	2026220.07	26.53	749.44
GS-6	769.71	1238189.42	2026022.55	19.55	750.16
GS-7	797.43	1237419.63	2025643.03	40.65	756.78
GS-8	769.40	1237314.15	2026576.30	18.55	750.85
GS-9	776.44	1237640.58	2027036.93	26.84	749.60
GS-10	764.18	1238583.63	2027008.55	35.00	729.18
GS-11	776.63	1239140.54	2027081.81	42.61	734.02
GS-12	775.70	1239064.20	2027471.39	48.18	727.52
GS-13	783.96	1237294.99	2027246.44	18.69	765.27
GS-14	740.82	1239460.61	2028315.26	21.27	719.55
GS-15	722.61	1239617.30	2028782.90	15.51	707.10
GS-16	713.11	1239205.24	2029067.91	20.44	692.67
GS-17	758.78	1237971.68	2027569.49	22.66	736.12
GS-18	733.45	1238342.79	2027638.32	15.07	718.38
GS-19	752.89	1238392.87	2028069.80	dry	dry
GS-20	716.61	1238812.87	2028418.95	19.58	697.03
GS-21	792.11	1238101.43	2028695.23	35.03	757.08
GS-22	732.71	1238610.81	2029031.16	18.03	714.68*
GS-23	700.73	1237682.91	2029786.70	dry	dry
GS-24	728.21	1238255.48	2029589.09	42.18	686.03
GS-25	788.47	1237863.92	2028247.05	18.05	770.42
GS-26	748.14	1237263.35	2028877.97	28.89	719.25
GS-27	702.67	1237224.47	2029687.47	13.61	689.06
GS-28	816.37	1237344.85	2028006.96	42.88	773.49
GS-29	749.67	1236553.98	2028298.21	19.81	729.86
GS-30	717.54	1236619.15	2028993.81	14.92	702.62

* ERRONEOUS READING – NOT USED ON PREPARATION ON MAP.

LINE LEGEND

— · · —	Property Line
— · —	Site Boundary
——	Buffer Boundary
▨	Wetland
—×—×—	Fence
– –840– –	Existing Contours
810	Groundwater Contour
——→	Flow Direction
GS-1 817.3 Ⓦ	Piezometer/ Groundwater Elevation

NOTE
ELEVATIONS AND COORDINATE VALUES SHOWN WERE ESTABLISHED FROM GEORGIA POWER CONTROL MONUMENTS "WANSLEY1" AND "WANSLEY3" USING G.P.S. METHODS. CONTOURS WERE ESTABLISHED FROM A FIELD RUN TOPOGRAPHIC SURVEY PERFORMED BY METRO ENGINEERING & SURVEY COMPANY INC. BETWEEN THE DATES OF JUNE 8, 2006 AND SEPT. 29, 2006.

The information provided on this drawing was originally prepared by qualified groundwater scientists at Southern Company Generation Engineering and Construction Services in August 2009 in support of the Industrial Solid Waste Permit 074–005D(LI). The drawing was subsequently modified with final approval from EPD occurring in May 2012. All noted submittals were sealed by a professional engineer and professional geologist licensed in the state of Georgia. The information on this sheet is provided for reference only and has not been amended by Hodges, Harbin, Newberry and Tribble, Inc. or Bunnell Lammons Engineering, Inc.

ANDREW W. ALEXANDER No.1485

R. BRANT LANE No. 27185 9/27/22

GEORGIA DEPARTMENT OF NATURAL RESOURCES
ENVIRONMENTAL PROTECTION DIVISION
Approved
Solid Waste Management Program
Approved By: Beverly Tipton
Digitally signed by Beverly Tipton Date: 2022.10.25 14:15:08 -04'00'

GEORGIA DEPARTMENT OF NATURAL RESOURCES
ENVIRONMENTAL PROTECTION DIVISION
Approved
Solid Waste Management Program
Approved By: Keith Stevens
Digitally signed by Keith Stevens Date: 2022.10.25 08:59:48 -04'00'

GRAPHIC SCALE
200 0 100 200 400 800
(IN FEET)
1 inch = 200 ft.

Southern Company Generation
Engineering and Construction Services
FOR

Georgia Power Company

PLANT WANSLEY
COAL COMBUSTION BY–PRODUCT DISPOSAL FACILITY
POTENTIOMETRIC SURFACE MAP 11/17/2006

REVISION	DATE	REVISION	DATE	REVISION	DATE	REVISION	DATE	REVISION	DATE	REVISION	DATE	REVISION	DATE
												0 CCR LF PERMIT APPLICATION [BY HHNT, INC.]	09–23–2022

BY	CHK'D	CIVIL APPR	ELECT APPR	I/C APPR	MECH APPR	DISC MGR
ANR	RBL					

SCALE	PROJ I.D.	DRAWING NUMBER	SHEET	CONT'D	REV
AS SHOWN	010505	**H1C11161**	1	FINAL	0

ANSI F: 40x28 Acad2008

7
6
5
4
3
2
1
F
E
D
C
B
A
NORTH ARROW
N 1240000
N 1239000
N 1238000
N 1237000
N 1236000
E 2028000
E 2029000
E 2030000
PLANT WANSLEY
SITE
GA. POWER RD.
HOLLINGSWORTH FERRY RD.
S. BRIDGE RD.
FIVE NOTCH RD.
HEARD CO.
COWETA CO.
CHATTAHOOCHEE RIVER
LOCATION MAP
YATES – YELLOW DIRT 230KV
GASTON (SEGCO) – YELLOW DIRT 230KV
SITE BOUNDARY
BUFFER BOUNDARY
200' SITE BUFFER
W O O D E D
STREAM
HIGH UNDER–BRUSH
GPC – YELLOW DIRT – PRESTON P/L
GPC P/L
GPCO P/L
HOLLINGSWORTH FERRY ROAD
HOLLINGSWORTH CEMETERY
INV. EL.=670.3
INV. EL.=671.2
INV. EL.=669.1
INV. EL.=670.7
INV. EL.=671.4
84"CMP'S
PROPOSED SECURITY ROAD LIMITS OF CLEARING AND GRUBBING
GS–1 812.26
GS–2 807.63
GS–3 779.35
GS–4 793.33
GS–5 750.44
GS–6 749.03
GS–7 747.06
GS–8 752.21
GS–9 751.15
GS–10 731.81
GS–11 735.04
GS–12 728.85
GS–13 766.58
GS–14 721.22
GS–15 712.47
GS–16 694.18
GS–17 736.23
GS–18 718.64
GS–19 729.57
GS–20 697.29
GS–21 753.73
GS–22 695.44
GS–23 683.37
GS–24 686.62
GS–25 768.15
GS–26 719.58
GS–27 689.65
GS–28 764.50
GS–29 730.36
GS–30 702.46
GS–31 822.45
810
800
790
780
770
760
750
740
730
720
710
700
690
GRAPHIC SCALE
200
0
100
200
400
800
(IN FEET)
1 inch = 200 ft.

Well #	Gnd Elev	Top of Casing	NORTHING	EASTING	Depth to GW	GW Elev.
GS-1	847.7	850.30	1238147.82	2023921.75	38.04	812.26
GS-2	834.2	837.07	1237856.24	2024760.49	29.44	807.63
GS-3	803.2	806.32	1238337.09	2024864.70	26.97	779.35
GS-4	805.9	808.99	1238570.93	2025555.30	15.66	793.33
GS-5	773.1	775.97	1238796.98	2026220.07	25.53	750.44
GS-6	767.1	769.71	1238189.42	2026022.55	20.68	749.03
GS-7	794.7	797.43	1237419.63	2025643.03	50.37	747.06
GS-8	766.5	769.40	1237314.15	2026576.30	17.19	752.21
GS-9	772.7	776.44	1237640.58	2027036.93	25.29	751.15
GS-10	761.4	764.18	1238583.63	2027008.55	32.37	731.81
GS-11	773.9	776.63	1239140.54	2027081.81	41.59	735.04
GS-12	773.2	775.70	1239064.20	2027471.39	46.85	728.85
GS-13	780.6	783.96	1237294.99	2027246.44	17.38	766.58
GS-14	737.7	740.82	1239460.61	2028315.26	19.6	721.22
GS-15	719.7	722.61	1239617.30	2028782.90	10.14	712.47
GS-16	710.5	713.11	1239205.24	2029067.91	18.93	694.18
GS-17	756.1	758.78	1237971.68	2027569.49	22.55	736.23
GS-18	731.6	733.45	1238342.79	2027638.32	14.81	718.64
GS-19	750	752.89	1238392.87	2028069.80	23.32	729.57
GS-20	713.8	716.61	1238812.87	2028418.95	19.32	697.29
GS-21	789.4	792.11	1238101.43	2028695.23	38.38	753.73
GS-22	729.3	732.71	1238610.81	2029031.16	37.27	695.44
GS-23	697.9	700.73	1237682.91	2029786.70	17.36	683.37
GS-24	725	728.21	1238255.48	2029589.09	41.59	686.62
GS-25	785.7	788.47	1237863.92	2028247.05	20.32	768.15
GS-26	744.7	748.14	1237263.35	2028877.97	28.56	719.58
GS-27	699.7	702.67	1237224.47	2029687.47	13.02	689.65
GS-28	813.4	816.37	1237344.85	2028006.96	51.87	764.50
GS-29	746.7	749.67	1236553.98	2028298.21	19.31	730.36
GS-30	714.6	717.54	1236619.15	2028993.81	15.08	702.46
GS-31	843.5	846.39	1237996.60	2025212.76	23.94	822.45

LINE LEGEND

▬ ▬ ▬	Property Line
▬ · ▬ ·	Site Boundary
▬	Buffer Boundary
▨	Wetland
—×—×—	Fence
–840–	Existing Contours
–810–	Groundwater Contour
→	Flow Direction
GS–1 817.3 Ⓦ	Piezometer/ Groundwater Elevation

NOTE
ELEVATIONS AND COORDINATE VALUES SHOWN WERE ESTABLISHED FROM GEORGIA POWER CONTROL MONUMENTS "WANSLEY1" AND "WANSLEY3" USING G.P.S. METHODS. CONTOURS WERE ESTABLISHED FROM A FIELD RUN TOPOGRAPHIC SURVEY PERFORMED BY METRO ENGINEERING & SURVEY COMPANY INC. BETWEEN THE DATES OF JUNE 8, 2006 AND SEPT. 29, 2006.

GEORGIA
DEPARTMENT OF NATURAL RESOURCES
ENVIRONMENTAL PROTECTION DIVISION
Approved
Solid Waste Management Program
Approved By: Keith Stevens Digitally signed by Keith Stevens Date: 2022.10.25 08:59:48 -04'00'

GEORGIA
DEPARTMENT OF NATURAL RESOURCES
ENVIRONMENTAL PROTECTION DIVISION
Approved
Solid Waste Management Program
Approved By: Beverly Tipton Digitally signed by Beverly Tipton Date: 2022.10.25 14:15:08 -04'00'

The information provided on this drawing was originally prepared by qualified groundwater scientists at Southern Company Generation Engineering and Construction Services in August 2009 in support of the Industrial Solid Waste Permit 074–005D(LI). The drawing was subsequently modified with final approval from EPD occurring in May 2012. All noted submittals were sealed by a professional engineer and professional geologist licensed in the state of Georgia. The information on this sheet is provided for reference only and has not been amended by Hodges, Harbin, Newberry and Tribble, Inc. or Bunnell Lammons Engineering, Inc.

ANDREW W. ALEXANDER No. 1485
NO. 27185 R. GRANT LANE
9/27/22

Southern Company Services, Inc.

Southern Company Generation
Engineering and Construction Services
FOR
Georgia Power Company

PLANT WANSLEY
COAL COMBUSTION BY–PRODUCT DISPOSAL FACILITY
POTENTIOMETRIC SURFACE MAP 04/10/2009

REVISION	DATE
0	09–23–2022
CCR LF PERMIT APPLICATION [BY HHNT, INC.]	

BY	CHK'D	CIVIL APPR	ELECT APPR	I/C APPR	MECH APPR	DISC MGR
ANR	RBL		╳	╳	╳	╳

SCALE	PROJ I.D.	DRAWING NUMBER	SHEET	CONT'D	REV
AS SHOWN	010505	**H1C11163**	1	FINAL	0

ANSI F: 40x28 Acad2008

7
6
5
4
3
2
1
F
E
D
C
B
A
N
YATES - YELLOW DIRT 230 KV
GASTON (SEGCO) - YELLOW DIRT 230 KV
PERMITTED SITE BOUNDARY
200' SITE BUFFER
200' UNDISTURBED BUFFER
YELLOW DIRT - DRESDEN T/L
N 1239000
E 2025000
WOODED
JURISDICTIONAL WETLAND IMPACT,
25' STREAM BUFFER IMPACT,
25' STREAM BUFFER, (TYP.)
STREAM
JURISDICTIONAL WETLAND AND STREAM BUFFER IMPACT,
UNDERDRAIN REQUIRED
JURISDICTIONAL WETLAND AND STREAM BUFFER IMPACT,
500' WASTE LIMIT
500' WASTE BUFFER
500'
HOLLINGSWORTH FERRY ROAD
HOLLINGSWORTH CEMETERY
24" PERIMETER ROAD
20' DIKE
10' DITCH
GWA-1
GWA-2
GWA-3
GWA-4
GWC-5
GWC-6
GWC-7
GWC-8
GWC-9
GWC-10
GWC-11
GWC-12
GWC-13
GWC-14
GWC-15
GWC-16
GWC-17
GWC-18
GWC-19
GWC-20
GWC-21
GWC-22
GWC-23
GWC-24
GWC-25
GWC-26
GWC-27
GWA-28
GWA-29
GWC-30
GWC-31
GWC-32
GWC-33
GWC-34
GWC-35
SWA-1
SWC-2
SWC-3
SWC-4
SWC-5
SWA-6
SWC-7
SWC-8
SWC-9
GS-1
GS-5
GS-6
GS-8
GS-9
GS-10
GS-11
GS-12
GS-17
GS-19
GS-21
GS-22
GS-23
GS-24
GS-25
GS-26
GS-27
GS-28
GS-29
GS-30
GS-31
690
700
710
720
730
740
750
760
770
780
790
800
810
820

LEGEND:

⊕ GWC-34	PROPOSED DOWNGRADIENT WELL
⊕ GWA-36	PROPOSED UPGRADIENT WELL
● SWC-4	SURFACE WATER MONITORING POINTS
Ⓦ GS-1	PIEZOMETER LOCATION
	SITE BOUNDARY
	200' BUFFER
	500' WASTE BUFFER
	25' STREAM BUFFER
	LIMITS OF CLEARING
	EXCAVATION LAYOUT CONTROL
▨	WETLANDS
50	EXISTING GROUND CONTOURS
50	FINAL GRADE CONTOURS
	LIMITS OF WASTE
	UNDERDRAIN
	GROUNDWATER ELEVATION CONTOUR

Summary of Groundwater Elevations
Plant Wansley Landfill
March 2021 Sampling Event

Monitoring Well ID	Total Depth (ft BTOC)	Top of Casing (ft NAVD88)	Depth to Water (ft BTOC)	Groundwater Elevation (ft NAVD88)
GWA-1	[illegible]	[illegible]	[illegible]	[illegible]
GWA-2	[illegible]	[illegible]	[illegible]	[illegible]
GWA-3	[illegible]	[illegible]	[illegible]	[illegible]
GWA-4	[illegible]	[illegible]	[illegible]	[illegible]
GWC-5	[illegible]	[illegible]	[illegible]	[illegible]
GWC-6	[illegible]	[illegible]	[illegible]	[illegible]
GWC-7	[illegible]	[illegible]	[illegible]	[illegible]
GWC-8	[illegible]	[illegible]	[illegible]	[illegible]
GWC-9	[illegible]	[illegible]	[illegible]	[illegible]
GWC-10	[illegible]	[illegible]	[illegible]	[illegible]
GWC-11	[illegible]	[illegible]	[illegible]	[illegible]
GWC-12	[illegible]	[illegible]	[illegible]	[illegible]
GWC-13	[illegible]	[illegible]	[illegible]	[illegible]
GWC-14	[illegible]	[illegible]	[illegible]	[illegible]
GWC-15	[illegible]	[illegible]	[illegible]	[illegible]
GWC-16	[illegible]	[illegible]	[illegible]	[illegible]
GWC-17	[illegible]	[illegible]	[illegible]	[illegible]
GWC-18	[illegible]	[illegible]	[illegible]	[illegible]
GWC-19	[illegible]	[illegible]	[illegible]	[illegible]
GWC-20	[illegible]	[illegible]	[illegible]	[illegible]
GWC-21	[illegible]	[illegible]	[illegible]	[illegible]
GWC-22	[illegible]	[illegible]	[illegible]	[illegible]
GWC-23	[illegible]	[illegible]	[illegible]	[illegible]
GWC-24	[illegible]	[illegible]	[illegible]	[illegible]
GWC-25	[illegible]	[illegible]	[illegible]	[illegible]
GWC-26	[illegible]	[illegible]	[illegible]	[illegible]
GWC-27	[illegible]	[illegible]	[illegible]	[illegible]
GWA-28	[illegible]	[illegible]	[illegible]	[illegible]
GWA-29	[illegible]	[illegible]	[illegible]	[illegible]
GWC-30	[illegible]	[illegible]	[illegible]	[illegible]
GWC-31	[illegible]	[illegible]	[illegible]	[illegible]
GWC-32	[illegible]	[illegible]	[illegible]	[illegible]
GWC-33	[illegible]	[illegible]	[illegible]	[illegible]
GWC-34	[illegible]	[illegible]	[illegible]	[illegible]
GWC-35	[illegible]	[illegible]	[illegible]	[illegible]

Notes: Depth to Water measured on March [illegible], 2021
ft NAVD88 = feet North American Vertical Datum of 1988
ft BTOC = feet below top of casing

No. 1485

NO. 27185
PROFESSIONAL
ENGINEER
R. BRANT LANE

9/27/22

I hereby certify that I am a qualified groundwater scientist, in accordance with the Rules of Solid Waste Management, and 40 CFR Part 258.50(g). A qualified groundwater scientist is a scientist or engineer who has received a baccalaureate or post-graduate degree in the natural sciences or engineering and has sufficient training and experience in groundwater hydrology and related fields as may be demonstrated by State registration, professional Certifications, or completion of accredited university programs that enable individuals to make sound professional judgements regarding groundwater monitoring, contaminant fate and transport, and corrective action. I hereby certify that the design of this groundwater monitoring system was developed in accordance with the Rules of Solid Waste Management, Chapter 391-3-4.

Signature: AW Alexander

Date: 2022-09-23

GRAPHIC SCALE

150 0 75 150 300 600

(IN FEET)
1 inch = 150 ft.

GEORGIA
DEPARTMENT OF NATURAL RESOURCES
ENVIRONMENTAL PROTECTION DIVISION
Approved
Solid Waste Management Program
Approved By: Beverly Tipton
Digitally signed by Beverly Tipton
Date: 2022.10.25 14:15:08 -04'00'

NOTES:

1. SURFACE WATER MONITORING POINTS SWC-2, SWC-3, SWC-4, SWC-5, SWC-8, AND SWC-9 ARE UNDERDRAIN OUTFALLS.
2. POTENTIOMETRIC CONTOUR MAP HAS BEEN OBTAINED FROM FIGURE A2 OF THE GROUNDWATER MONITORING PLAN PREPARED BY ATLANTIC COAST CONSULTING, INC., AND IS BASED ON THE MARCH 2021 GROUNDWATER SAMPLING EVENT.

REFERENCES:

1. FOR A COMPLETE DRAWING LIST SEE H1C11120

REVISION	DATE	REVISION	DATE	REVISION	DATE	REVISION 0	DATE 09-23-2022
						CCR LF PERMIT APPLICATION [BY HHNT, INC.]	

BY	CHK'D	CIVIL APPR	ELECT APPR	I/C APPR	MECH APPR	DISC MGR
ANR	RBL		☒	☒	☒	☒

Southern Company Generation
Engineering and Construction Services
FOR

Georgia Power Company

PLANT WANSLEY
COAL COMBUSTION BY-PRODUCT DISPOSAL FACILITY
COMPLIANCE NETWORK

SCALE	PROJ I.D.	DRAWING NUMBER	SHEET	CONT'D	REV
AS SHOWN	010505	**H1C11165**	1	FINAL	0

ANSI F: 40x28 Acad2008